ORDER NO. KM40103771C7

F12

Service Manual

Telephone Equipment

Caller ID Compatible

KX-TG2553B / KX-TG2553F / KX-TG2553S

2.4GHz Cordless System

Black Version

Blue Version

Silver Version

(for U.S.A.)

(for Latin America)

(Handset) (Base Unit)

SPECIFICATIONS

SPECIFICATIONS

	Base Unit	Handset
Power Source:	AC Adaptor (PQLV1Z)	Rechargeable Ni-cd battery
Receiving Frequency:	24 channels within 2.4015~2.4705 GHz	24 channels within 2.4015~2.4705 GHz
Receiving Method:	Direct conversion	Direct conversion
Transmitting Frequency:	24 channels within 2.4015~2.4705 GHz	24 channels within 2.4015~2.4705 GHz
Oscillation Method:	PLL synthesizer	PLL synthesizer
Tolerance of OSC Frequency:	24 MHz ± 720 Hz	24 MHz ± 720 Hz
Modulation Method:	NA (FSK/SS)	NA (FSK/SS)
Spread spectrum Method:	Direct sequence	Direct sequence
Chip rate	15 chip	15 chip
ID Code:	22-bit	22-bit
Dial Mode:		Tone (DTMF)/Pulse
Redial:		Up to 32 digits
Speed Dialer:		Up to 48 digits
Power Consumption:		11 days at Standby, 4.5 hours at Talk (maximum)
Dimension (H × W × D):	$2^{9}/_{16}$" × $6^{1}/_{2}$" × 8" (65 × 165 × 203 mm)	$1^{15}/_{32}$" × $2^{9}/_{32}$" × $9^{11}/_{32}$" (37 × 58 × 237 mm)
Weight	0.76 lbs. (338 g)	0.50 lbs. (225 g)

Design and specifications are subject to change without notice.

© 2001 Kyushu Matsushita Electric Co., Ltd. All rights reserved.
Unauthorized copying and distribution is a violation of law.

⚠ WARNING

This service information is designed for experienced repair technicians only and is not designed for use by the general public.
It does not contain warnings or cautions to advise non-technical individuals of potential dangers in attempting to service a product.
Products powered by electricity should be serviced or repaired only by experienced professional technicians. Any attempt to service or repair the product or products dealt with in this service information by anyone else could result in serious injury or death.

Panasonic

When you mention the serial number, write down all 11 digits. The serial number may be found on the label affixed to the bottom of the unit.

FOR SERVICE TECHNICIANS

ICs and LSIs are vulnerable to static electricity.
When replacing, the following precautions will help prevent recurring malfunctions.
1. Cover the plastic parts boxes with aluminum foil.
2. Ground the soldering irons.
3. Use a conductive mat on the work table.
4. Do not grasp IC or LSI pins with bare fingers.

1. LOCATION OF CONTROLS

1.1. Base Unit

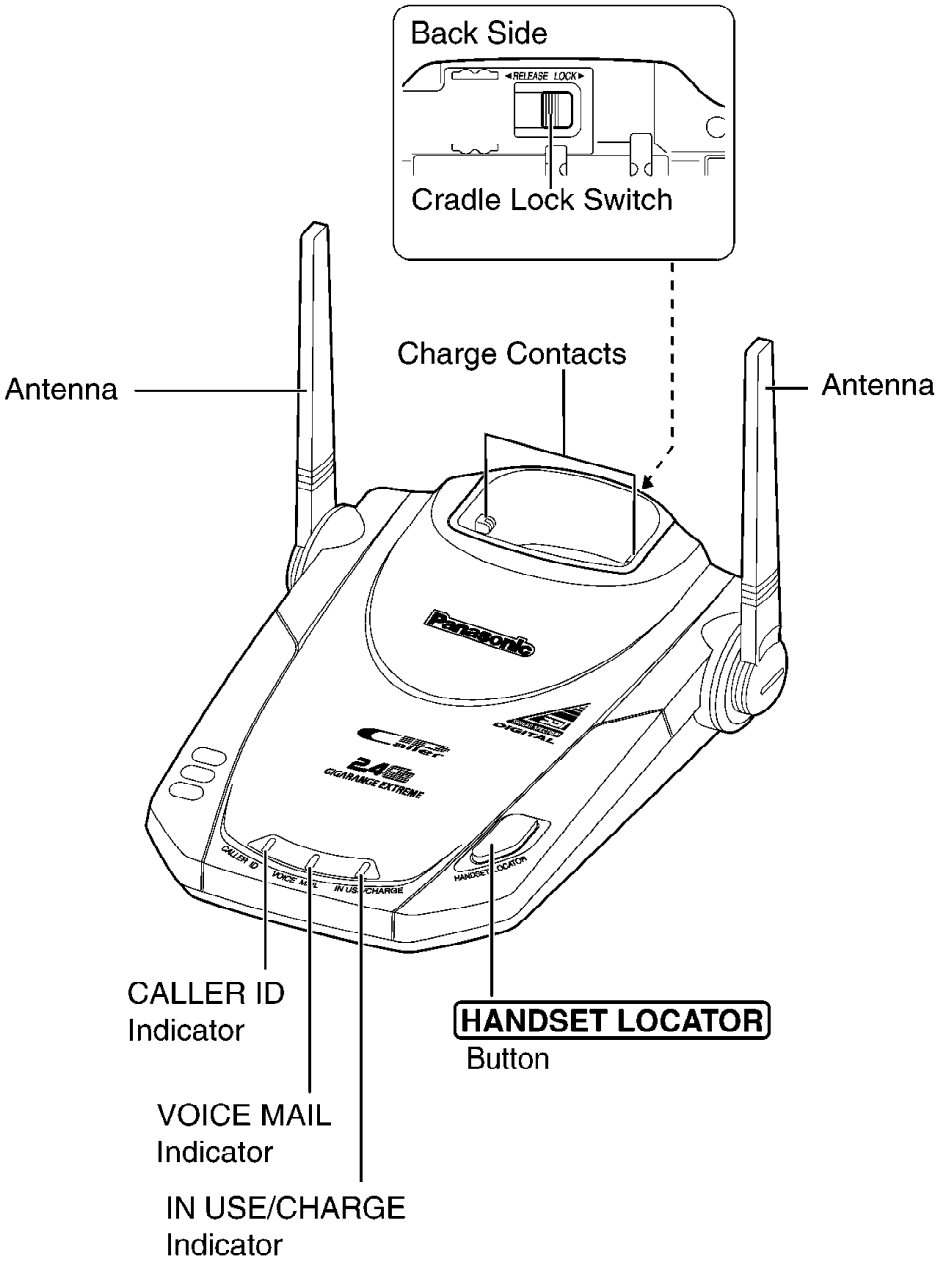
Back Side
RELEASE LOCK
Cradle Lock Switch
Antenna
Charge Contacts
Antenna
Panasonic
CALLER ID
Indicator
VOICE MAIL
Indicator
IN USE/CHARGE
Indicator
HANDSET LOCATOR
Button

1.2. Handset

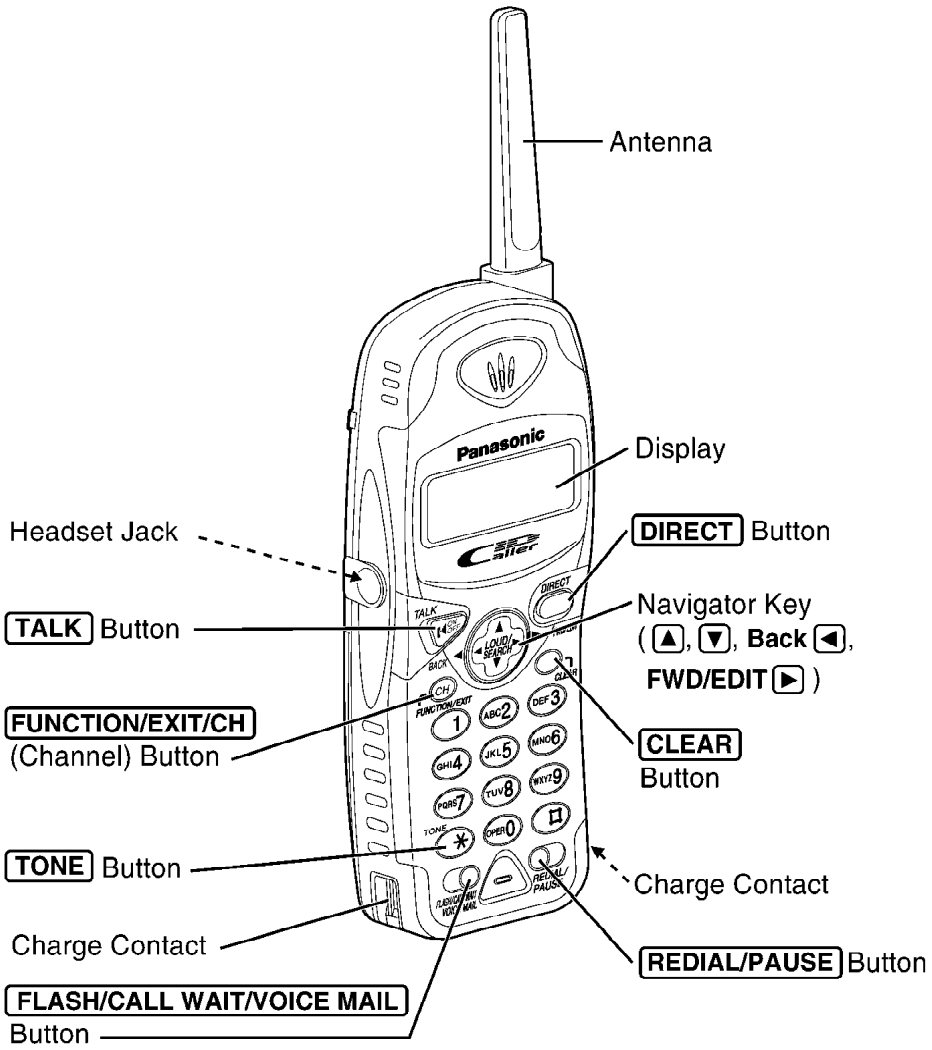

2. DISPLAY

The handset shows you instructions and information on the display.
These display prompts are shown below.

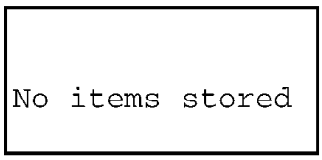

The Caller List is empty or there are no stored items in the directory.

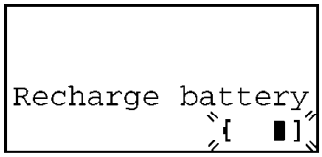

The battery needs to be charged. Place the handset on the base unit to charge the battery.

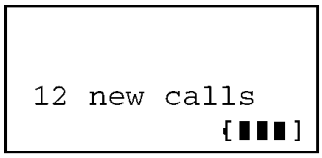

The display shows the number of new calls and the battery strength while the handset is on the base unit.

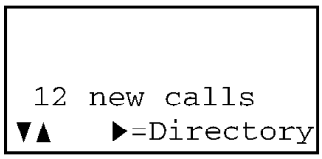

This display shows the number of new calls when ▲ or ▼ is pressed while the handset is off the base unit.
To search from the most recent call, press ▼.
To search from the oldest call, press ▲.
To go to the directory list, press **FWD/EDIT** ▶ (Directory key).

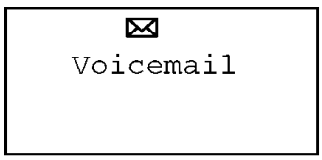

The display shows the voice mail message(s) is/are recorded.

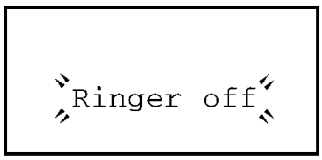

When the handset ringer volume is set to OFF, "Ringer off" will flash for about 45 seconds before the handset returns to the standby mode.

When a call is received, the display shows the caller's name and number after the first ring.

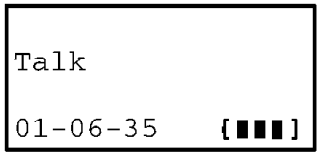

During a conversation, the display shows the length of the call (ex. 1 hour, 6 minutes and 35 seconds). The battery strength is also displayed.

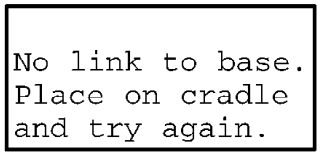

The handset has lost communication with the base unit. Place the handset on the base unit and try again.

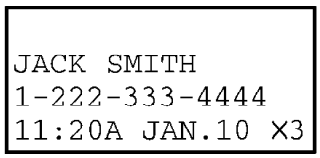

This is a name from the Caller List.
The display shows:
— the caller's name,
— the caller's number,
— the time and date of the last call (ex. Jan. 10, 11:20 AM), and
— the number of times called (ex. 3 times).

This is a name from the directory. The stored name and phone number are displayed.

The base unit is paging the handset.

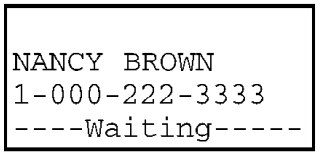

A second call is received during a conversation.

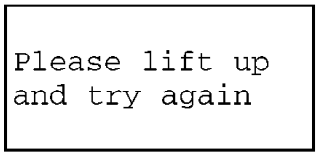

▼, ▲, **BACK** ◄ or **FWD/EDIT** ► was pressed with the handset while the handset was on the base unit. Lift the handset and press the button again.

While the base unit was not in the standby mode, ▼ or ▲ was pressed to search the Caller List/directory list, **FWD/EDIT** ► was pressed to select an option or **CLEAR** was pressed.

When trying to store an item or Caller List information in the directory, the directory memory is full.

Save error

While storing items in the directory, the handset has lost communication with the base unit. Move closer to the base unit and try again.

3. SETTINGS

3.1. Connections

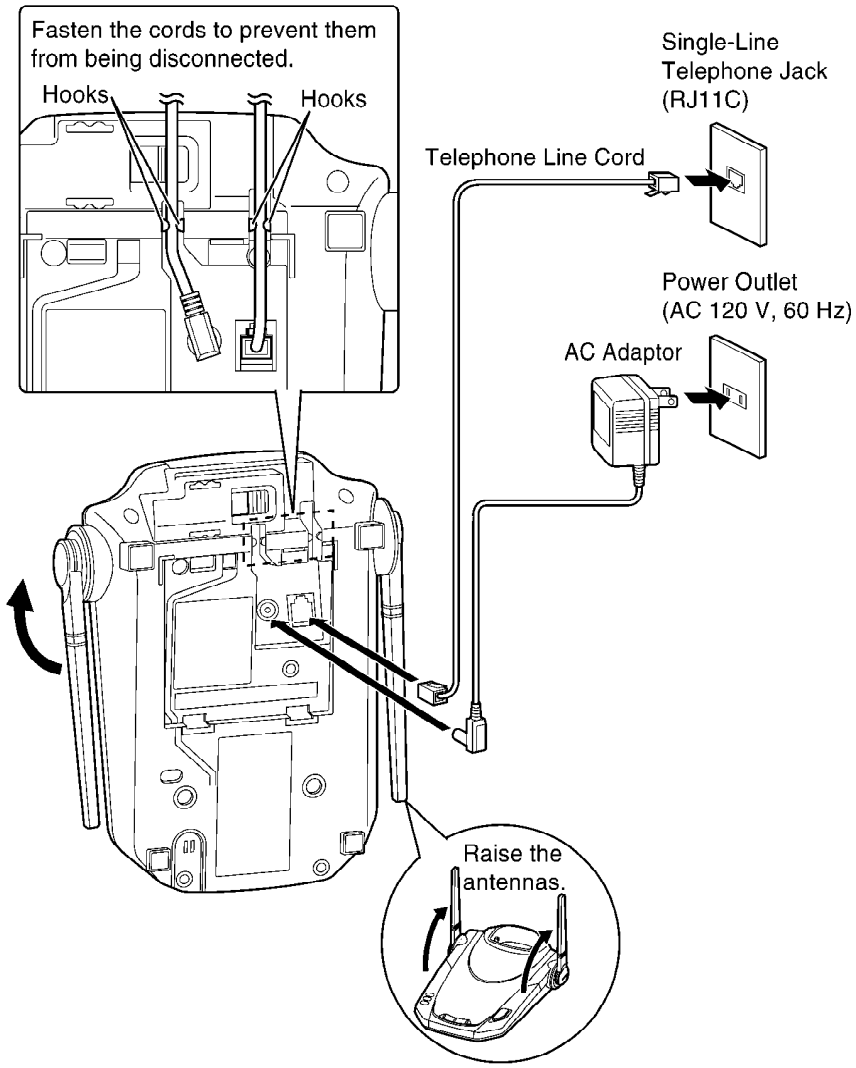

- USE ONLY WITH Panasonic AC ADAPTOR PQLV1Z.
- The AC adaptor must remain connected at all times. (It is normal for the adaptor to feel warm during use.)
- If your unit is connected to a PBX which does not support Caller ID services, you cannot access those services.

3.2. Adding Another Phone

This unit will not function during a power failure. To connect a standard telephone on the same line, use the Panasonic T-adaptor KX-J66.

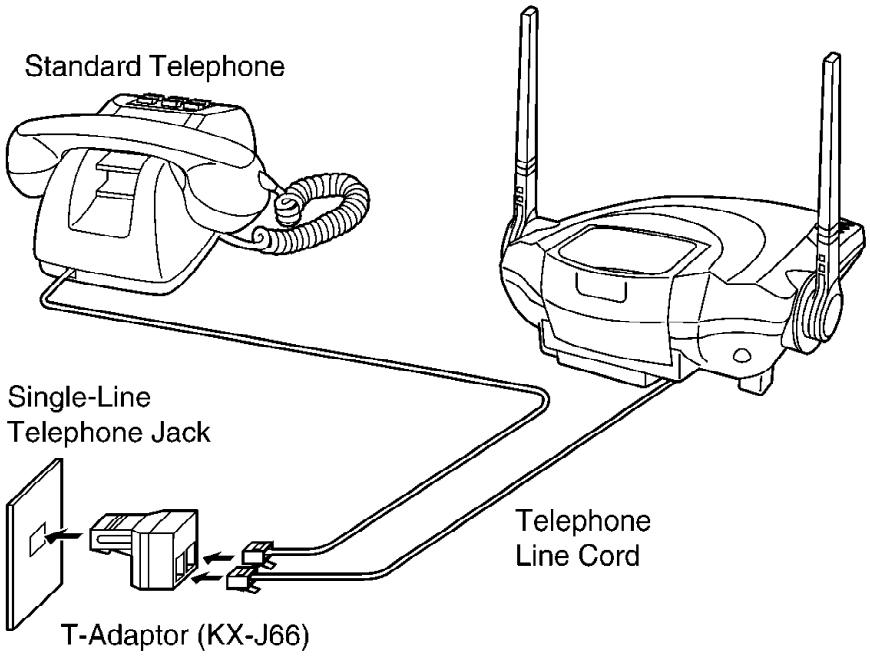

3.3. STANDARD BATTERY LIFE

3.3.1. Battery Charge

Place the handset on the base unit and charge for about **6 hours** before initial use.

- The IN USE/CHARGE indicator lights and a beep sounds.

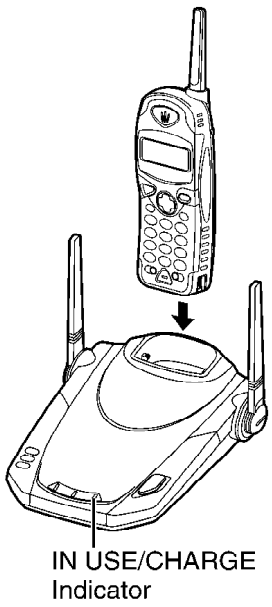

3.3.2. Battery strength

You can check the battery strength on the handset display while the handset is on the base unit, while it is in use (making/answering a call etc.), or after viewing the Caller List or directory items, programming etc. The battery strength will remain for 5 seconds after using the handset, then the display will return to the standby mode.

The battery strength is as shown in the chart below.

Display prompt	Battery strength
[▮▮▮]	Fully charged
[▮▮]	Medium
[▮]	Low
[▮] (flashing)	Needs to be recharged.

3.3.3. Recharge

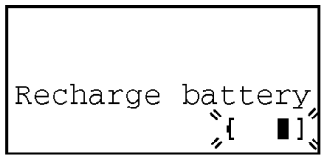

Recharge the battery when:
– "Recharge battery" is displayed on the handset,
– "[▮] " flashes on the display, or
–the handset beeps intermittently while it is in use.

- If you DO NOT recharge the handset battery for more than 15 minutes, the display will keep indicating "Recharge battery" and/or "[▮]" will continue to flash.

3.3.4. Battery information

After your Panasonic battery is fully charged:

Operation		Approx. battery life
While in use (TALK)	near the base unit*	Up to 4.5 hours
	away from the base unit	Up to 3.5 hours
While not in use (Standby)		Up to 11 days

* Within about 10 feet (3 m)

- Battery life may be shortened depending on usage conditions, such as viewing the Caller ID Caller List or directory list, and ambient temperature.
- **Clean the handset and the base unit charge contacts with a soft, dry cloth. Clean if the unit is subject to grease, dust or high humidity.** Otherwise the battery may not charge properly.
- If the battery is fully charged, you do not have to place the handset on the base unit until "Recharge battery" is displayed and/or "[▮]" flashes. This will maximize the battery life.
- The battery cannot be overcharged.

3.3.5. Standby mode (The handset is off the base Unit)

The handset goes into the standby mode after you finish using the handset (making/answering a call, viewing the Caller List or directory items etc.). The display is blank, but the handset can receive calls. The battery life is conserved in this mode.

3.4. Selecting the Dialing Mode

You can program the dialing mode **using the handset near the base unit**.
If you have touch tone service, set to "Tone". If rotary or pulse service is used, set to "Pulse". Your phone comes from the factory set to "Tone".
Make sure the unit is in the standby mode initially.

1 Press [FUNCTION/EXIT/CH].

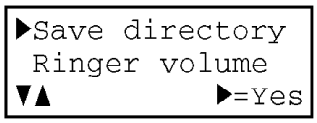

2 Press [▼] or [▲] repeatedly until the arrow points to "Program".

3 Press **FWD/EDIT** [▶] (Yes key).

4 Press [▼] or [▲] repeatedly until the arrow points to "Set dial mode".

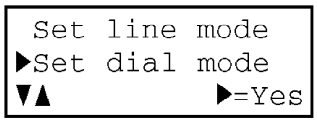

5 Press **FWD/EDIT** [▶] (Yes key).

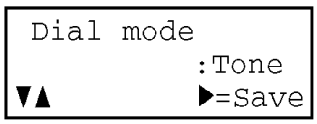

6 Press [▼] or [▲] to select "Pulse" or "Tone".

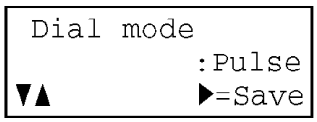

7 Press **FWD/EDIT** [▶] (Save key).
- A beep sounds.
- To return to the standby mode, press [FUNCTION/EXIT/CH].

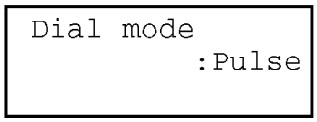

- You can exit the programming mode any time by pressing [FUNCTION/EXIT/CH].
- If the handset has lost communication with the base unit, 3 beeps sound and "No link to base. Place on cradle and try again." is displayed.

3.5. Selecting the Line Mode

If the line is connected to a low voltage system such as a PBX, set to "B". Otherwise the Call Waiting Caller ID Feature may not be used.
Your phone comes from the factory set to "A". **Use the handset near the base unit. Make sure the unit is in the standby mode initially.**

1 Press FUNCTION/EXIT/CH.

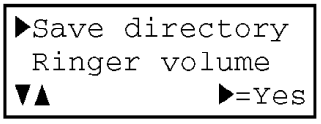

2 Press ▼ or ▲ repeatedly until the arrow points to "Program".

3 Press FWD/EDIT ▶ (Yes key).

4 Press ▼ or ▲ repeatedly until the arrow points to "Set line mode".

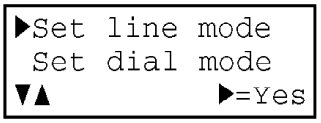

5 Press FWD/EDIT ▶ (Yes key).

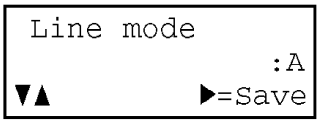

6 Press ▼ or ▲ to select "B" or "A".

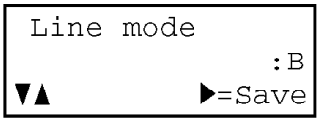

7 Press FWD/EDIT ▶ (Save key).
- A beep sounds.
- To return to the standby mode, press FUNCTION/EXIT/CH.

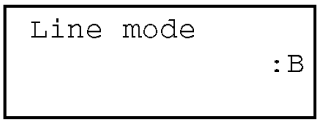

- You can exit the programming mode any time by pressing FUNCTION/EXIT/CH.
- If the handset has lost communication with the base unit, 3 beeps sound and "No link to base. Place on cradle and try again." is displayed.

4. OPERATION

4.1. Making Calls

4.1.1. With the Handset

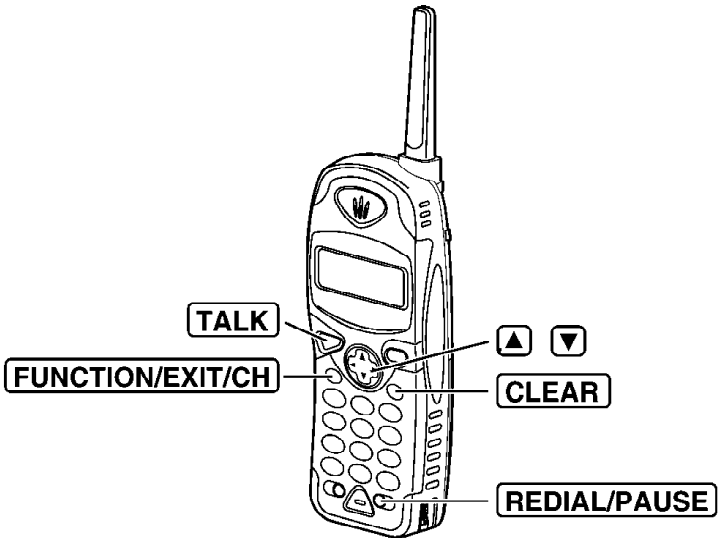

1 Press **TALK**.

```
Talk
```

2 Dial a phone number.
- The dialed number is displayed.
- After a few seconds, the display will show the length of the call and the battery strength.

```
Talk
1112222
```

```
Talk

00-00-00      [■■■]
```

3 To hang up, press **TALK** or place the handset on the base unit.

```
Off

00-01-08      [■■■]
```

- If the handset has lost communication with the base unit, 3 beeps sound and "`No link to base. Place on cradle and try again.`" is displayed.

If noise interferes with the conversation

Press **FUNCTION/EXIT/CH** to select a clearer channel or move closer to the base unit.

To redial the last number dialed on the handset

Press **TALK** and press **REDIAL/PAUSE**.

To dial after confirming the entered number

1 Dial a phone number.
- If you misdial, press **CLEAR** and dial again.

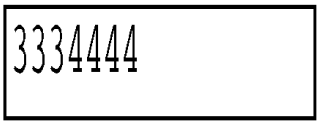

2 Press **TALK**.
- After a few seconds, the display will show the length of the call and the battery strength.

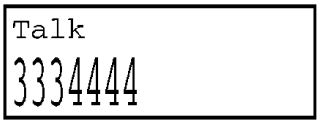

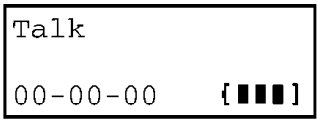

3 To hang up, press **TALK** or place the handset on the base unit.

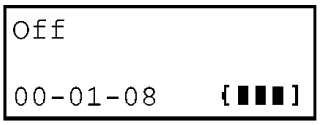

To redial after confirming the last number dialed

Press **REDIAL/PAUSE** and press **TALK**.

To adjust the receiver volume while talking

To increase, press ▲.
To decrease press ▼.
- Each time you press ▼ or ▲, the volume level will change.
- The display will return to the length of the call.

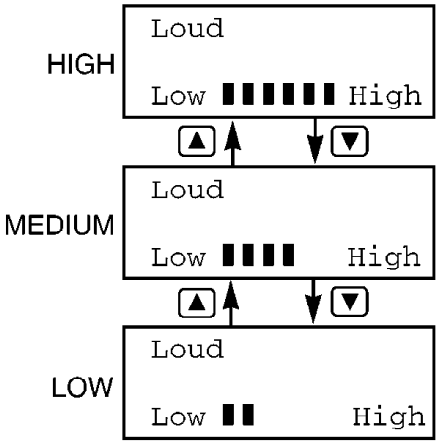

4.2. Answering Calls

When a call is received, the unit rings, "Incoming call" is displayed and the CALLER ID indicator flashes quickly.
If you subscribe to a Caller ID service, the calling party information will be displayed after the first ring. In order to view the Caller ID information, please wait until the second ring to answer a call.

With the Handset

If the handset is off the base unit, press [TALK].

- You can also answer a call by pressing any dialing button [0] to [9], [*] or [#] (—**Any Key Talk**).

Auto Talk

If you set the Auto Talk feature to ON, you can answer a call by lifting the handset off the base unit without pressing [TALK].

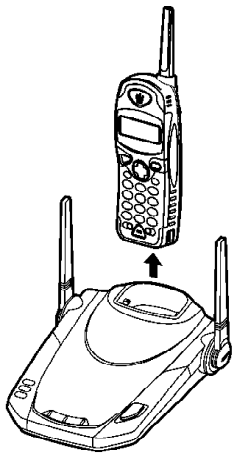

Lighted handset keypad

The handset dialing buttons will light when you press a button or lift the handset off the base unit, and flash when a call is received. The lights will go out a few seconds after pressing a button, lifting the handset or answering a call.

Backlit LCD display

The lighted handset display will stay on for a few seconds after pressing a handset button or lifting the handset off the base unit.

4.3. Flash Button

Pressing **FLASH/CALL WAIT/VOICE MAIL** allows you to use special features of your host PBX such as transferring an extension call or accessing special telephone services (optional) such as call waiting.

Selecting the flash time

The flash time depends on your telephone exchange or host PBX. You can select the following flash times: "700, 600, 400, 300, 250, 110, 100 or 90 ms (milliseconds)". Your phone comes from the factory set to "700 ms".

Make sure the unit is in the standby mode initially.

1 Press **FUNCTION/EXIT/CH**.

2 Press ▼ or ▲ repeatedly until the arrow points to "Program".

3 Press **FWD/EDIT** ▶ (Yes key).

4 Press ▼ or ▲ repeatedly until the arrow points to "Set flash time".

5 Press **FWD/EDIT** ▶ (Yes key).

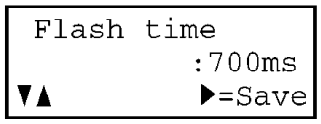

6 Press ▼ or ▲ repeatedly until the desired time is displayed.

7 Press **FWD/EDIT** ▶ (Save key).

- A beep sounds.
- To return to the standby mode, press **FUNCTION/EXIT/CH**.

- You can exit the programming mode any time by pressing **FUNCTION/EXIT/CH**.
- If you are connected via a PBX, a longer flash time may be necessary to use PBX functions (transferring a call etc.). Consult your PBX supplier for the correct setting.

4.4. Caller ID Service

This unit is compatible with a Caller ID service offered by your telephone company. If you subscribe to a Caller ID service, the calling party's information will be displayed after the first ring.

The unit can record information of up to 50 different callers in the Caller List. The Caller List information is sorted by the most recent to the oldest call. When the 51st call is received, the first call is deleted.

Using the list, you can automatically call back a caller. You can store the caller's names and numbers from the Caller List into the directory.
If you subscribe to both Caller ID and Call Waiting services, when a second call is received while talking, the new caller's name and phone number will be displayed.

4.4.1. How caller information is displayed when a call is received

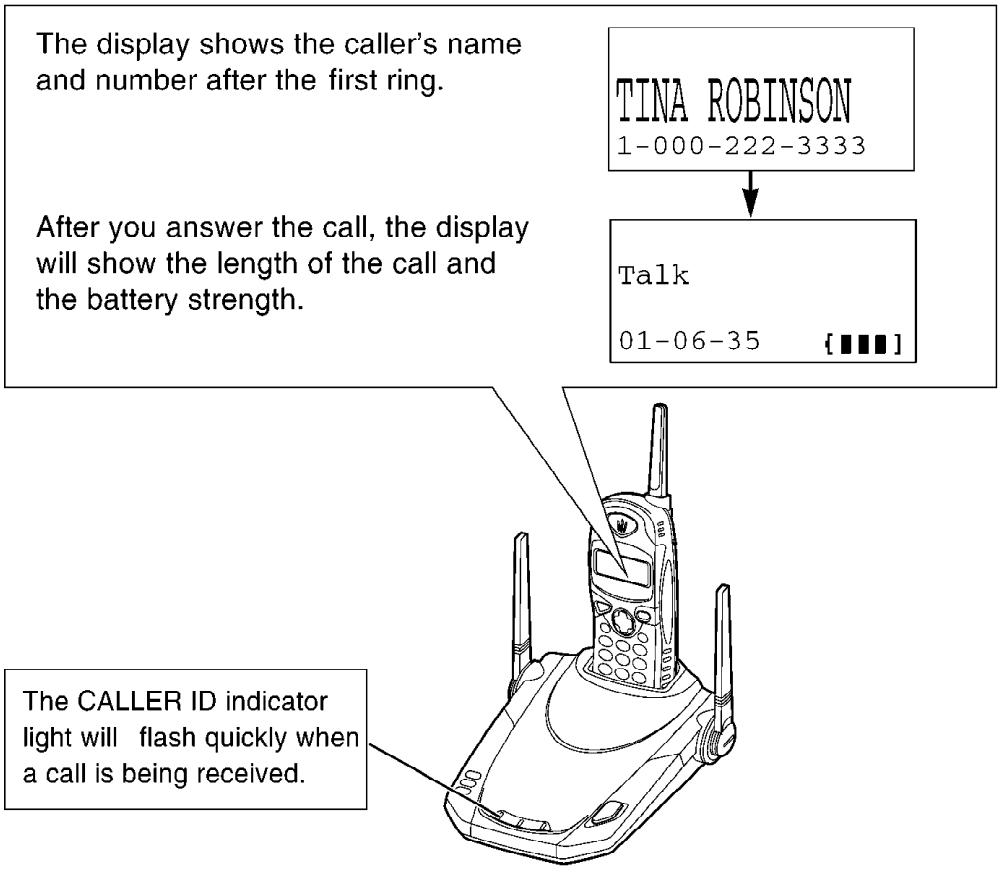

- Caller information cannot be displayed in the following cases:
  - —If the caller dialed from an area which does not provide a Caller ID service, the display will show "Out of area".
  - —If the caller has requested not to display his/her information, the display will show "Private caller".
- If your unit is connected to a PBX which does not support Caller ID services, you cannot access those services.
- The name display service may not be available in some areas. For further information, please contact your telephone company.

4.4.2. To check the number of new calls

When new calls have been received, the CALLER ID indicator flashes slowly on the base unit.

When new calls have been received, the CALLER ID indicator flashes slowly on the base unit.

While the handset is on the base unit:

If you have received 10 new calls, the display will show the following:

```
10 new calls
          [■■■]
```

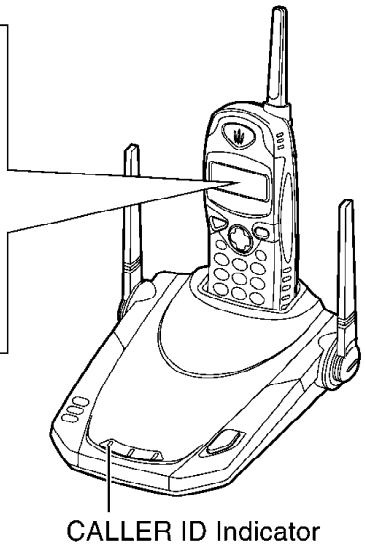

While the handset is off the base unit:

Press ▼ or ▲ to turn the display on. If you have received 10 new calls, the displayed will show the following.

```
10 new calls
▼▲   ►=Directory
```

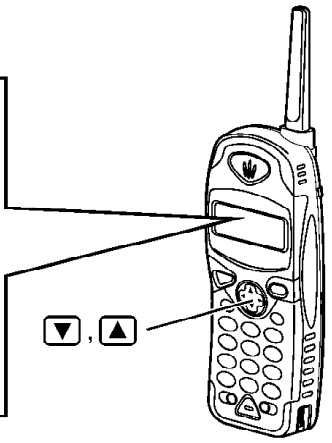

• If "No items stored" is displayed, the Caller List is empty.

4.4.3. Viewing the caller list

You can view the caller list with the handset. Caller List information includes the caller's name and phone number, the time and date the call was received, and the number of times that caller called.

Make sure the handset is in the standby mode initially.

1 Press ▼ or ▲ to enter the Caller List.

- The display will show, for example, the following.

```
  2 new calls
▼▲    ▶=Directory
```

- You can go to the directory list by pressing **FWD/EDIT** ▶.

2 To search from the most recent call, press ▼.
To search from the oldest call, press ▲.

- To scroll between callers, press ▼ or ▲.

3 To exit the list, press **FUNCTION/EXIT/CH**.

- The handset will return to the standby mode.

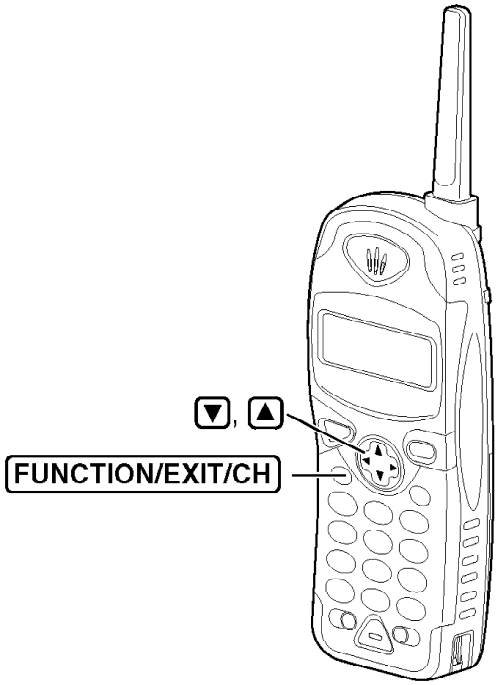

- Once new calls have been checked, "√" will be added.
- If "No items stored" is displayed, the Caller List is empty.
- If more than one call is received from the same caller, the date and time of the last call will be recorded. If the same caller calls again, the call entry with "√" will be deleted.

Ex. When you search from the most recent call:

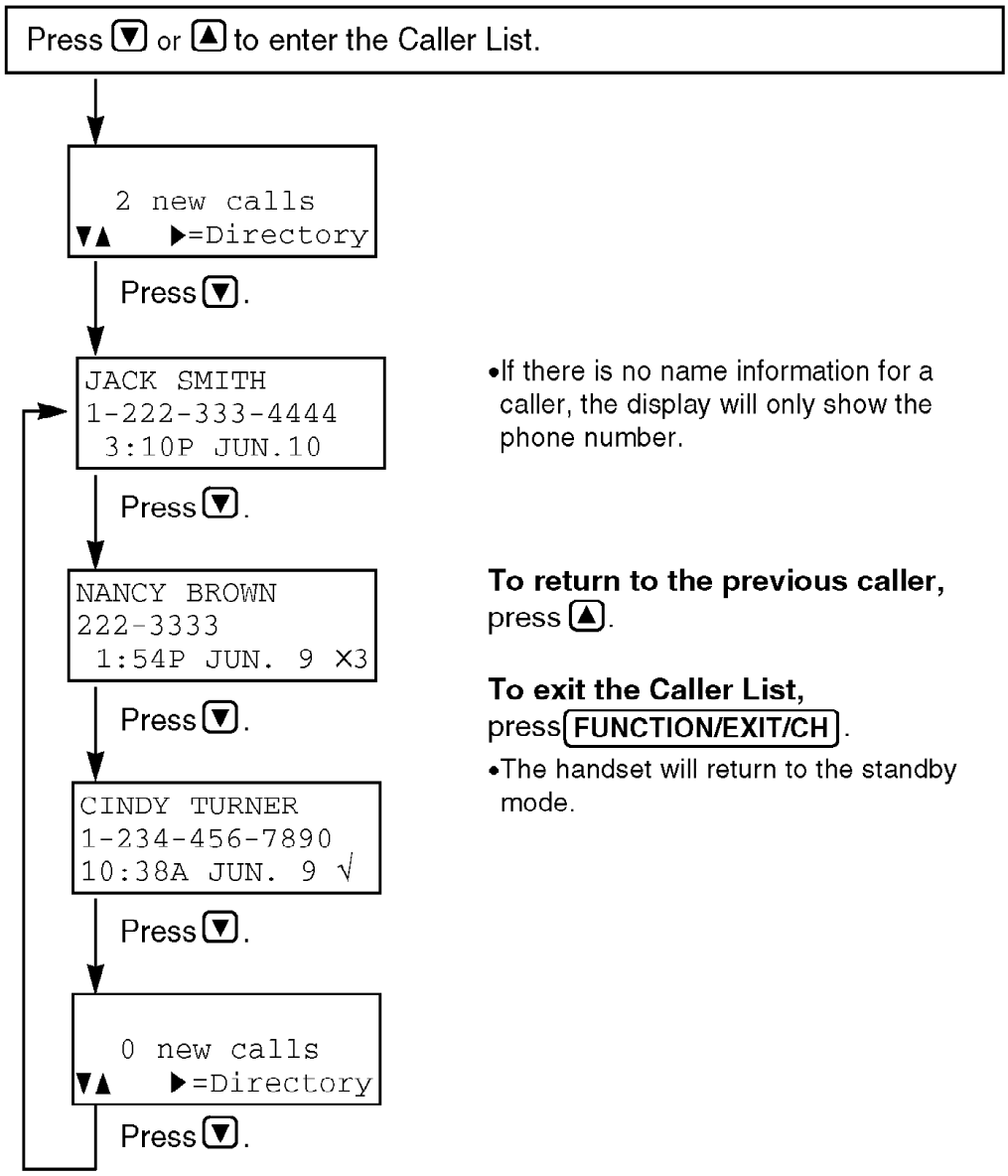

- If there is no name information for a caller, the display will only show the phone number.

To return to the previous caller,
press ▲.

To exit the Caller List,
press **FUNCTION/EXIT/CH**.

- The handset will return to the standby mode.

Display meaning:

√ : You have checked this caller information, answered the call or called back the caller.

X2-X9 : The number of times the same caller called (up to 9). After checking, "X2" – "X9" will be replaced with "√".

4.4.4. Calling back from the caller list

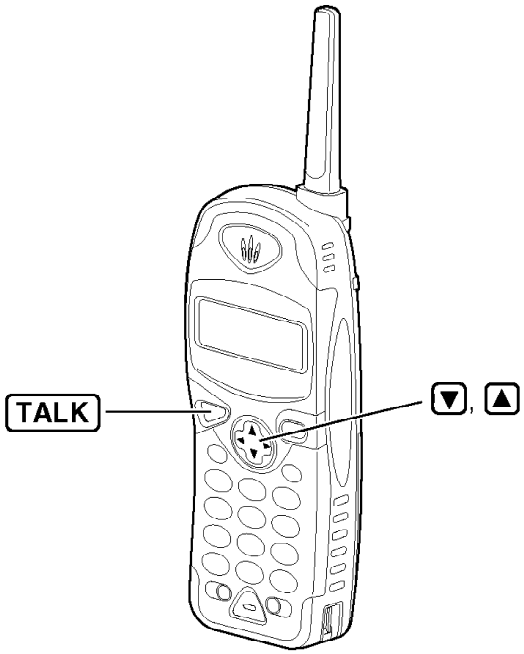

1 Press ▼ or ▲ to enter the Caller List.

```
  3 new calls
▼▲   ▶=Directory
```

2 Press ▼ or ▲ repeatedly to find the desired caller.

```
CINDY TURNER
1-234-456-7890
11:20A JAN.12 X3
```

3 Press TALK.

- The displayed phone number is dialed automatically.

```
Talk
12344567890
```

```
Talk

01-06-35    [■■■]
```

- In some cases, you may have to edit the number before dialing. (Ex. You may have to delete"1" and the area code.)
- If a phone number is not displayed in the caller information, you cannot call back that caller.

4.4.5. Editing the caller's phone number

You can edit a phone number into one of 4 patterns.
Make sure the unit is in the standby mode initially.

1 Press ▼ or ▲ to enter the Caller List.

2 Press ▼ or ▲ repeatedly to find the desired caller, and press **FWD/EDIT** ▶.

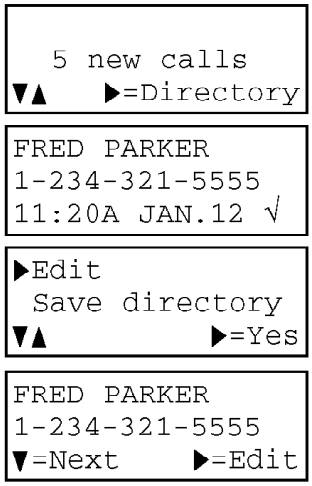

3 While the arrow points to "Edit", press **FWD/EDIT** ▶ (Yes key).

4 Press ▶ (Edit key) to select a pattern.

- Each time you press **FWD/EDIT** ▶ the number is rearranged into one of 4 different patterns.

ⓐ [Phone no.]

ⓑ [Area code] – [Phone no.]

ⓒ 1 – [Phone no.]

ⓓ 1 – [Area code] – [Phone no.]

- The order in which patterns ⓐ – ⓓ are displayed depends on how the telephone number is displayed in step 2.

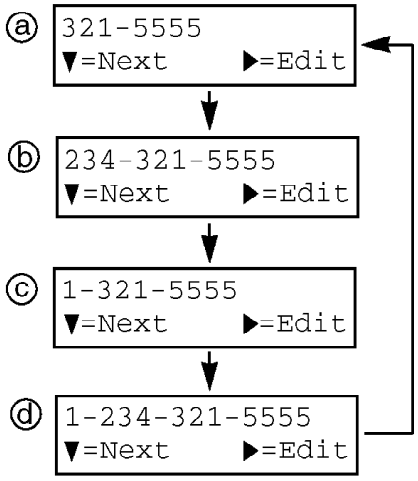

5 After editing the number, you can continue with calling back or storing procedures. To call back, press **TALK**.
To store the number in the directory, press ▼ (Next key), and press **FWD/EDIT** ▶.

- The number edited in step 4 will not be maintained in the Caller List.

4.4.6. Storing caller list information in the directory

You can store names and phone numbers that are in the Caller List into the directory.

Make sure the unit is in the standby mode initially.

1 Press ▼ or ▲ to enter the Caller List.

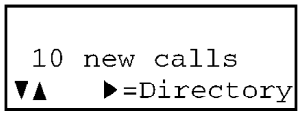

2 Press ▼ or ▲ repeatedly to find the caller you want to store in the directory, and press **FWD/EDIT** ▶ (Yes key).

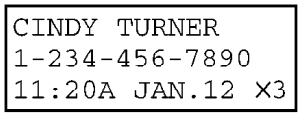

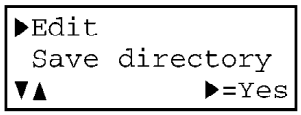

3 Press ▼ or ▲ to select "Save directory", and press **FWD/EDIT** ▶ (Yes key).

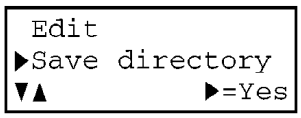

If there is no name information for the caller, "Enter name" will be displayed.

a) If a name is not required, press ▼ (Next key) and press **FWD/EDIT** ▶ (Save key).

b) If a name is required, enter the name. When finished, press ▼ (Next key) and press **FWD/EDIT** ▶ (Save key).

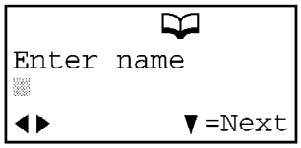

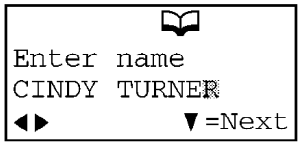

- A beep sounds.
- To continue storing other item, repeat from step 2.
- To return to the standby mode, press **FUNCTION/EXIT/CH**.

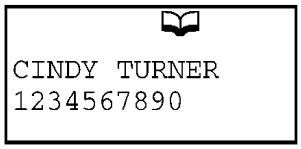

- You can exit the programming mode any time by pressing **FUNCTION/EXIT/CH**.
- If the display shows "Directory full" in step 3, press **FUNCTION/EXIT/CH** to exit the list.
  After the maximum of 50 items has been stored "Directory full" is also displayed.
- You cannot store caller information in the directory if a phone number is not displayed.
- If 3 beeps sound and the display shows "Save error", move closer to the base unit and start again from step 1.

4.4.7. Erasing caller list information

After checking the Caller List, you can erase some or all of the entries.
Make sure the unit is in the standby mode initially.

To erase a specific caller from the Caller List

1 Press ▼ or ▲ to enter the Caller List.

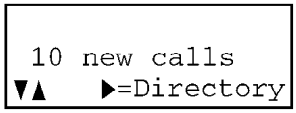

2 Press ▼ or ▲ repeatedly to find the caller you want to erase from the Caller List.

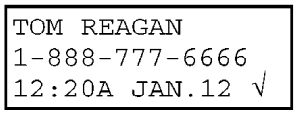

3 Press **CLEAR**.

- A beep sounds and the information is erased.
- To erase other items, repeat from step 2.
- To return to the standby mode, press **FUNCTION/EXIT/CH**.

4.4.8. To erase all entries in the Caller List

Before erasing all entries, make sure that "0 new call" is displayed.

1 Press ▼ or ▲ to enter the Caller List.

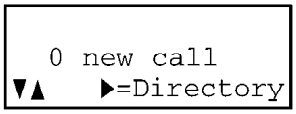

2 Press **CLEAR**.

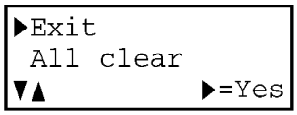

3 Press ▼ or ▲ to select "All clear".

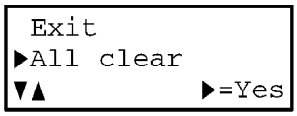

4 Press **FWD/EDIT** ▶ (Yes key) or **CLEAR**.

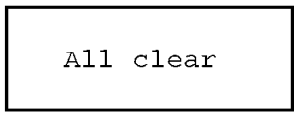

- A beep sounds and all entries are erased.

5. DISASSEMBLY INSTRUCTIONS

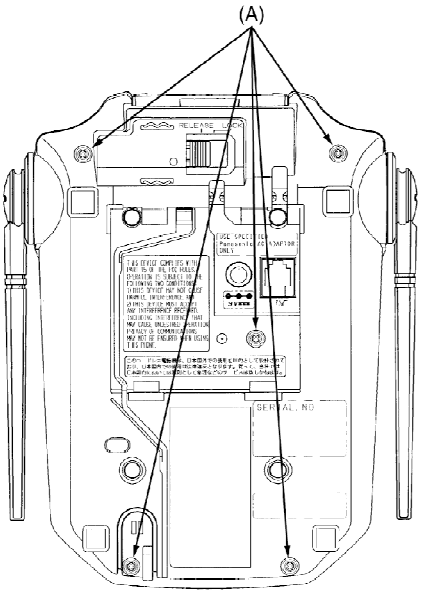

Fig. 1

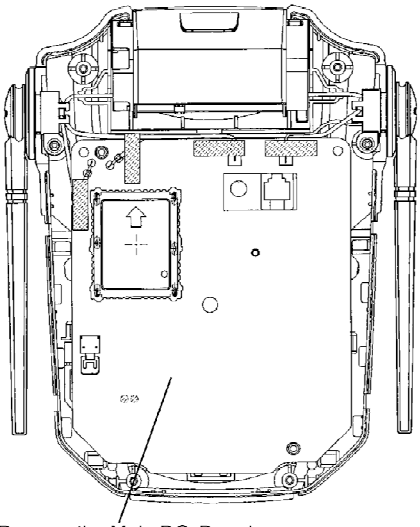

Remove the Main P.C. Board.

Fig. 2

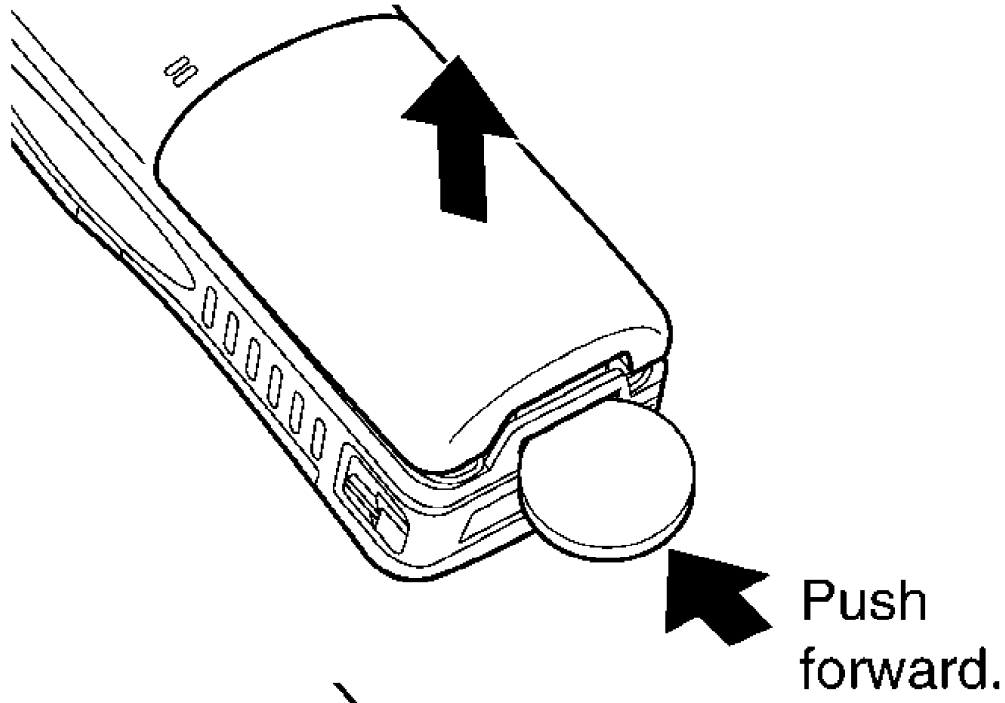
Push
forward.

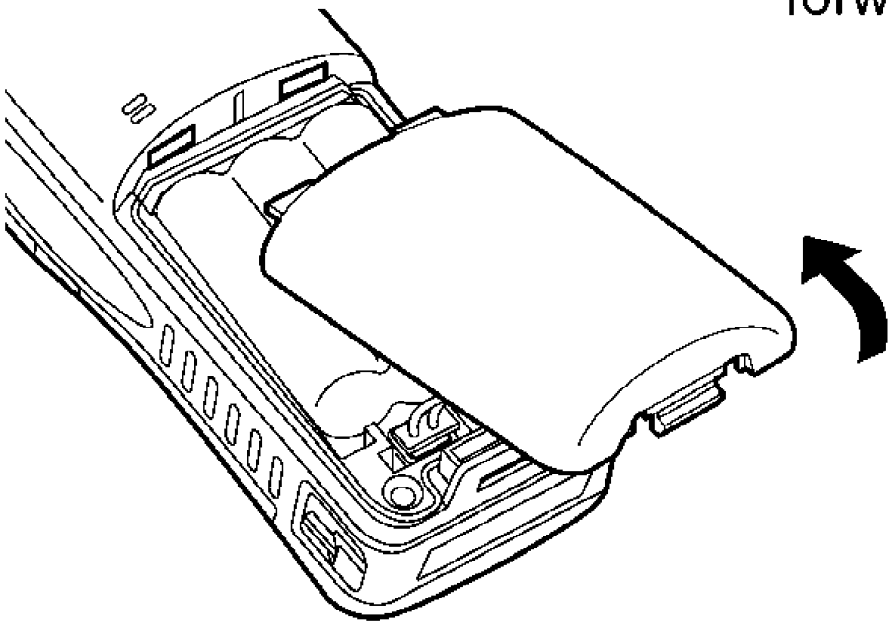

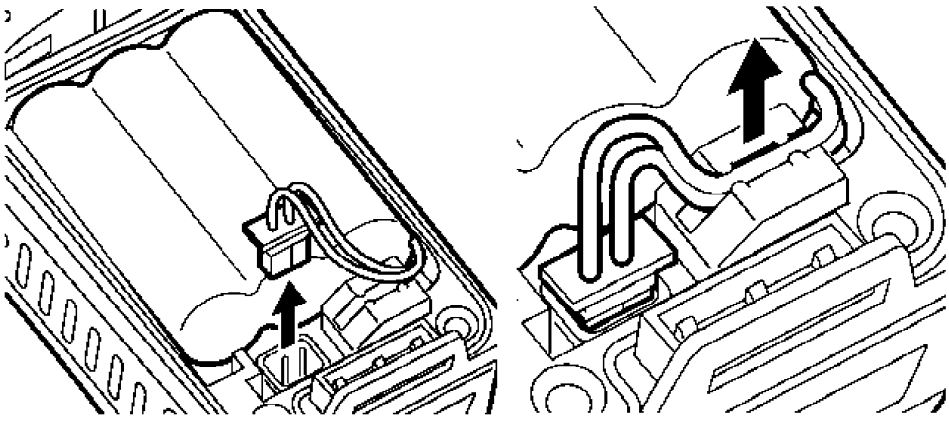

Fig. 3

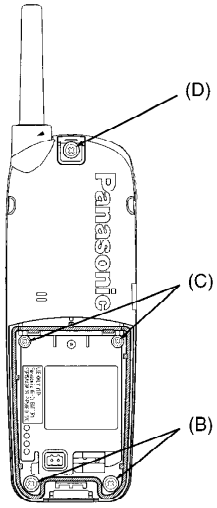

Fig. 4

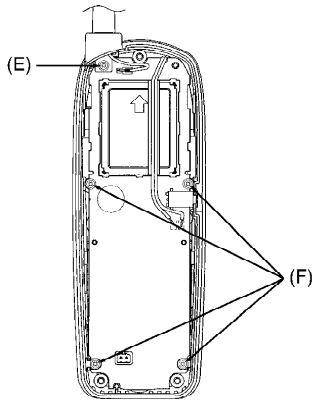

Fig. 5

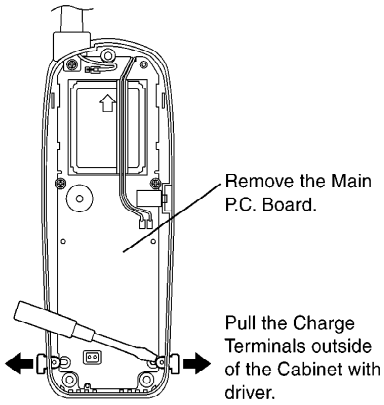

Fig. 6

Ref. No.	Procedure	Shown in Fig -.	To remove -.	Remove -.
1	1	1	Lower Cabinet	Screws (2.6 × 14).....(A) × 5
2	1, 2	2	Main P.C. Board	Remove the Main P.C. Board
3	3	3	Battery Cover	Remove the Battery Cover
4	3, 4	4	Rear Cabinet	Screws (2.6 × 12).....(B) × 2 Screws (2 × 8).....(C) × 2 Screw (2.6 × 12).....(D) × 1
5	3 ~ 5	5	Antenna	Screw (2.6 × 12).....(E) × 1
			Main P.C. Board	Screws (2 × 8).....(F) × 4
6	3 ~ 6	6	Main P.C. Board	Pull the Charge Terminals outsid Remove the Main P.C. Board

6. ASSEMBLY INSTRUCTIONS

6.1. Assembly the LCD to P.C. Board (Handset)

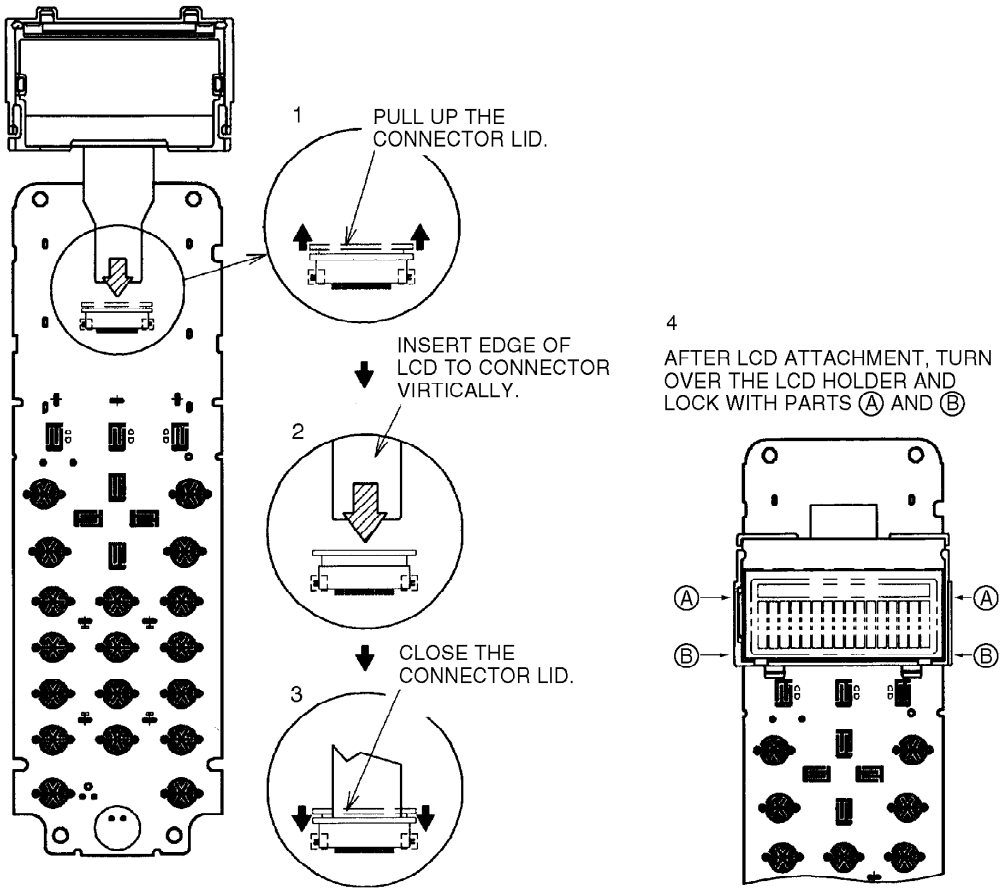

6.2. How To Check Splash Resistance

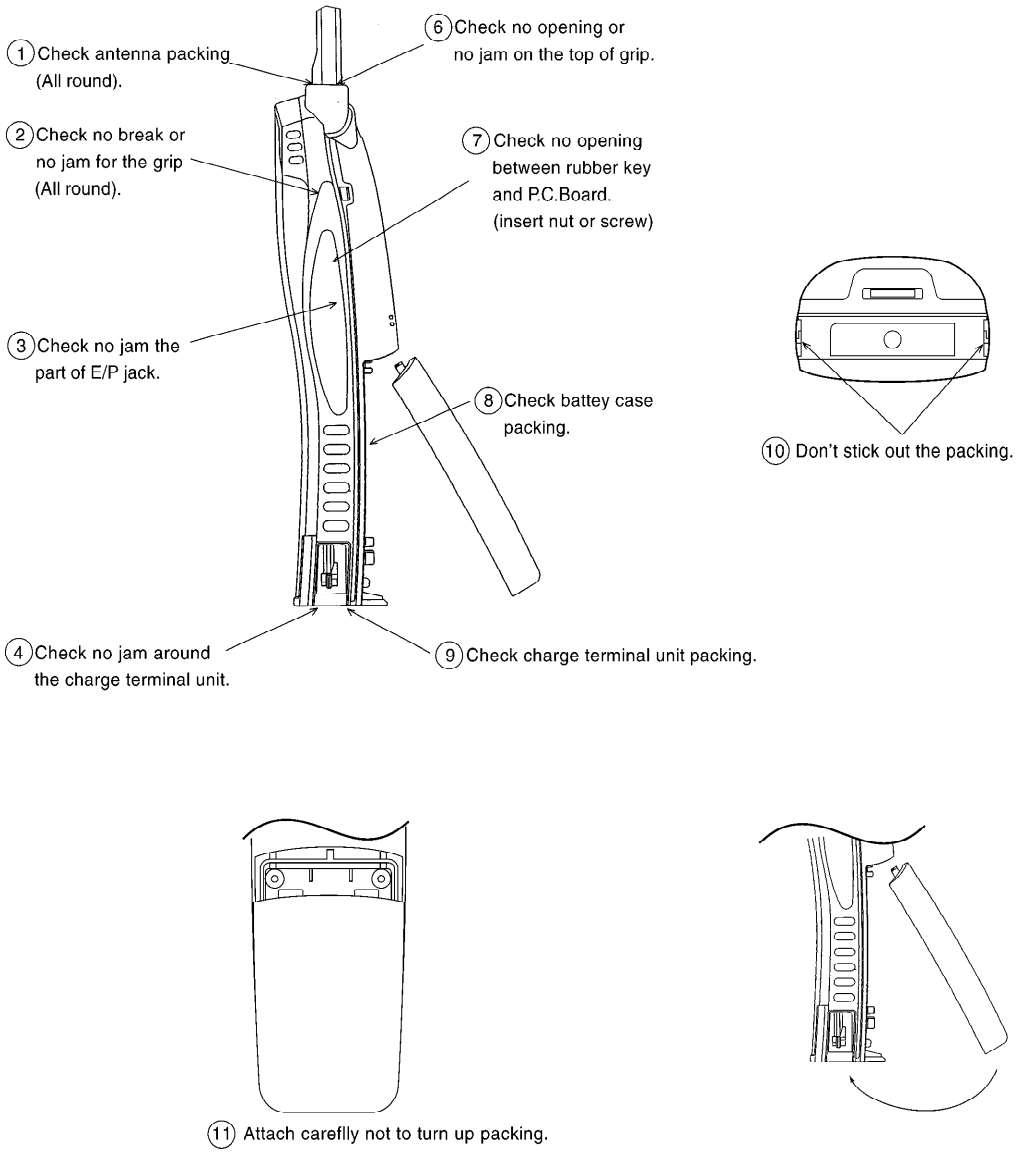

6.3. Replace the RF unit

For HS

Follow this procedure below when replacing HS RF unit.

1. **Remove speaker cables of LCD unit on HS main board. And remove LCD unit.**
2. **Remove solder on six legs of RF unit.**
3. **Remove solder on all pads of RF unit.**
4. **Replace defective RF unit with new HS RF unit.**

   NOTE:

   Do not use BU RF unit for HS one.

   HS RF unit is different from BU one.

5. Solder all pads of RF unit.

6. Solder six RF legs.

7. Put LCD unit and solder speaker wire.

NOTE:

Speaker wire has polarity.

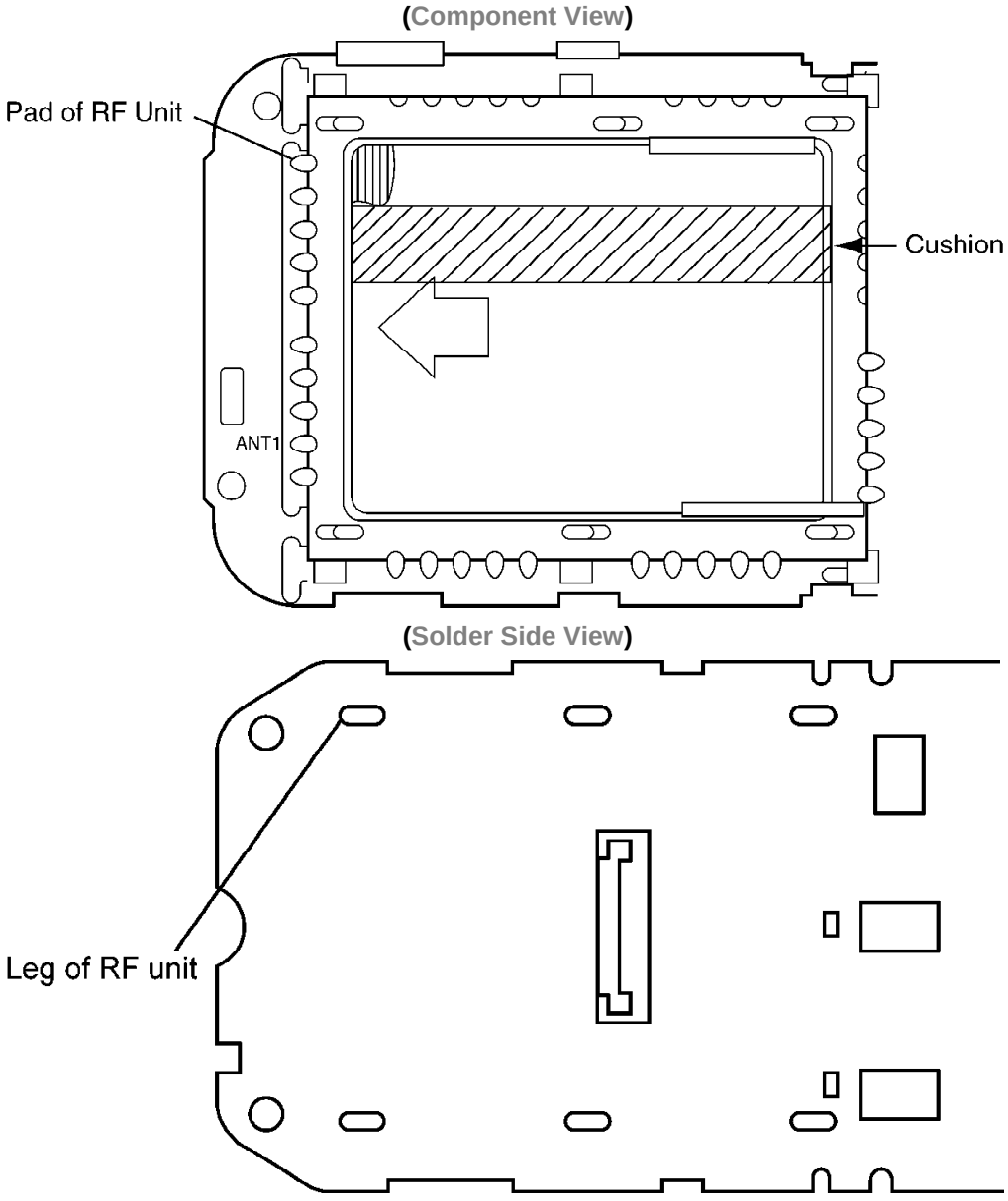

7. TROUBLESHOOTING GUIDE

MAIN

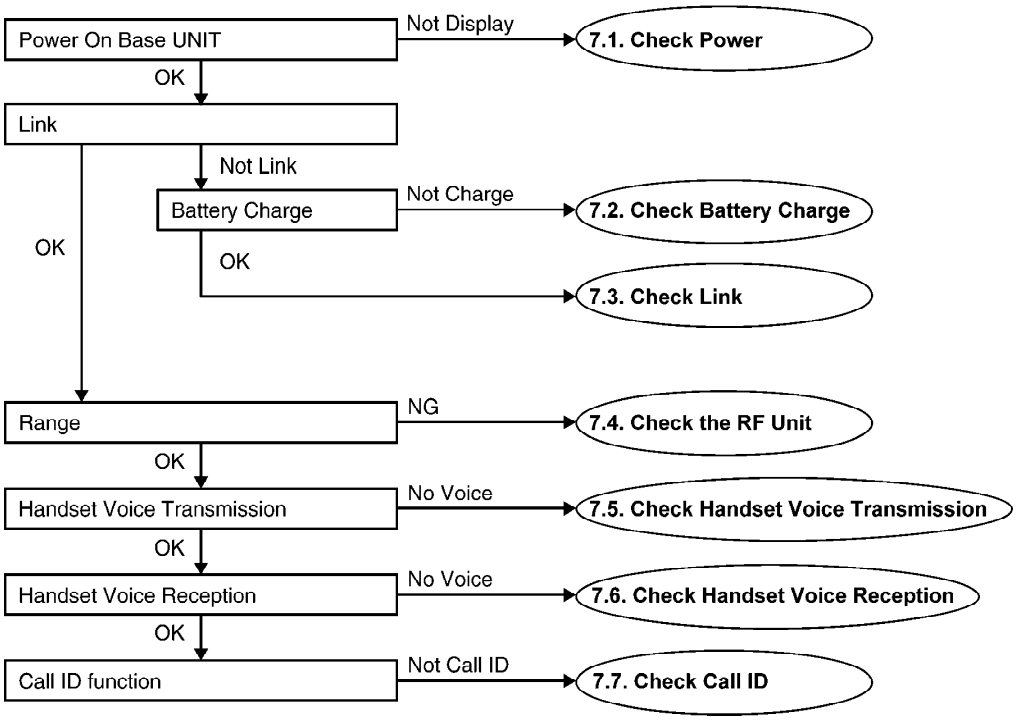

7.1. Check Power

BASE UNIT

Is the AC Adaptor inserted into 120V outlet?

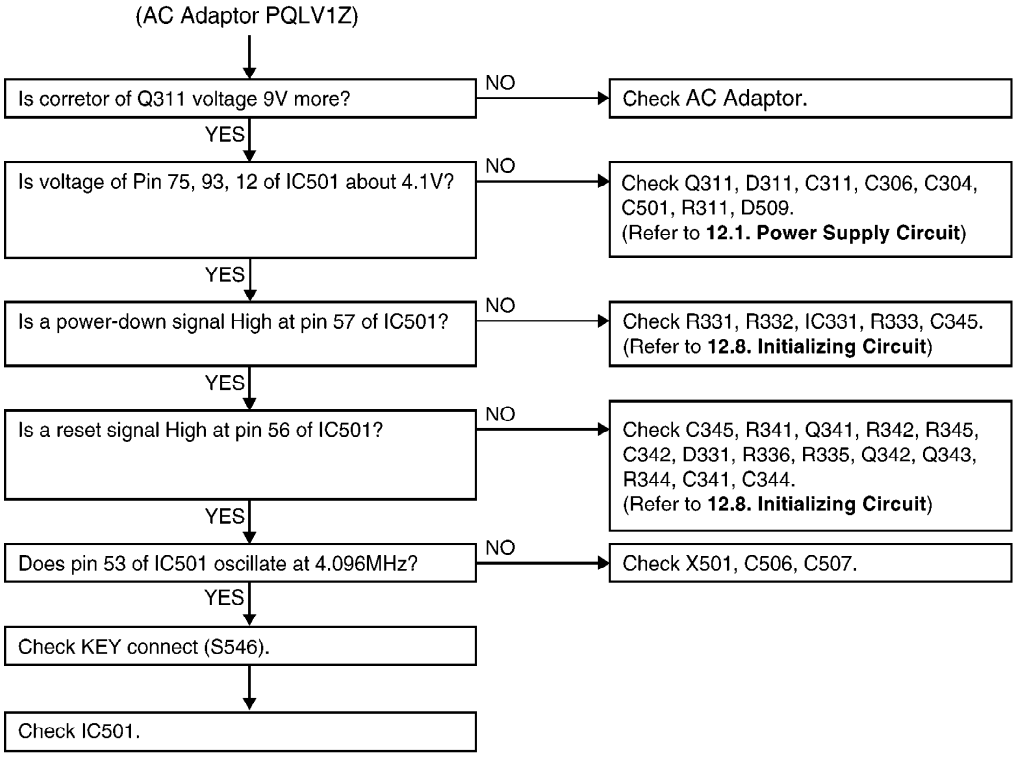

7.2. Check Battery Charge

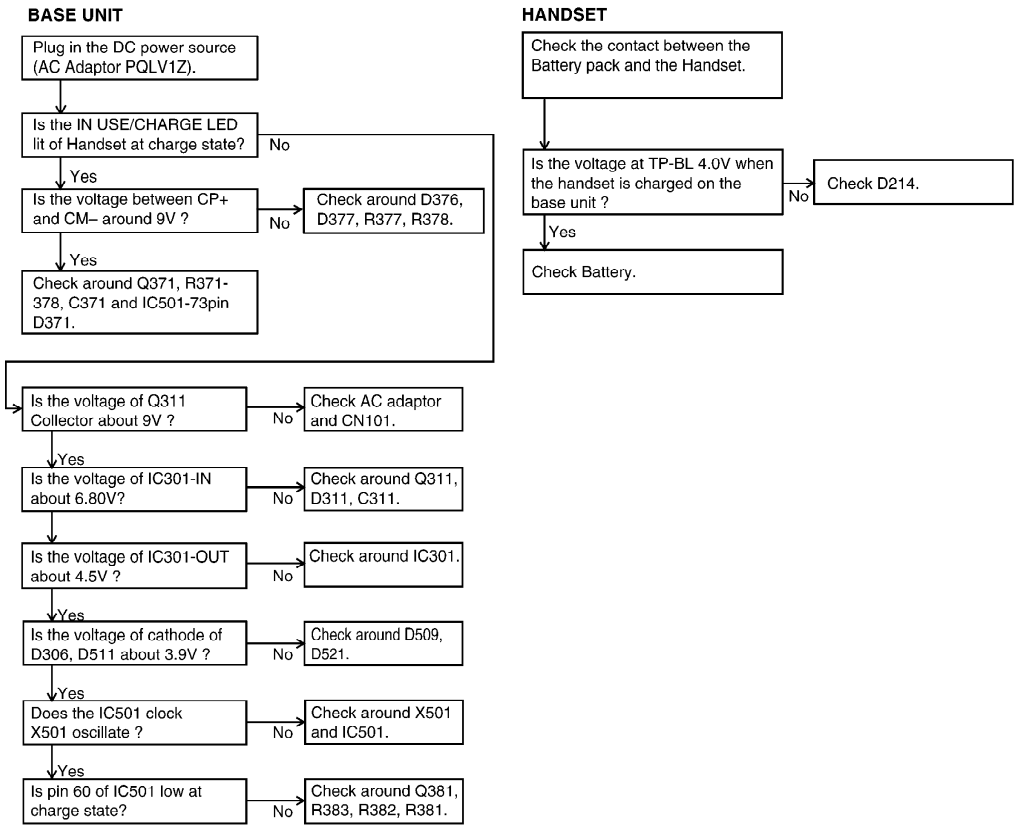

NOTE:

- CP/CM: Refer to Base Unit Reference Drawing 1.

- TP-BL: Refer to Handset Reference Drawing.

7.3. Check Link

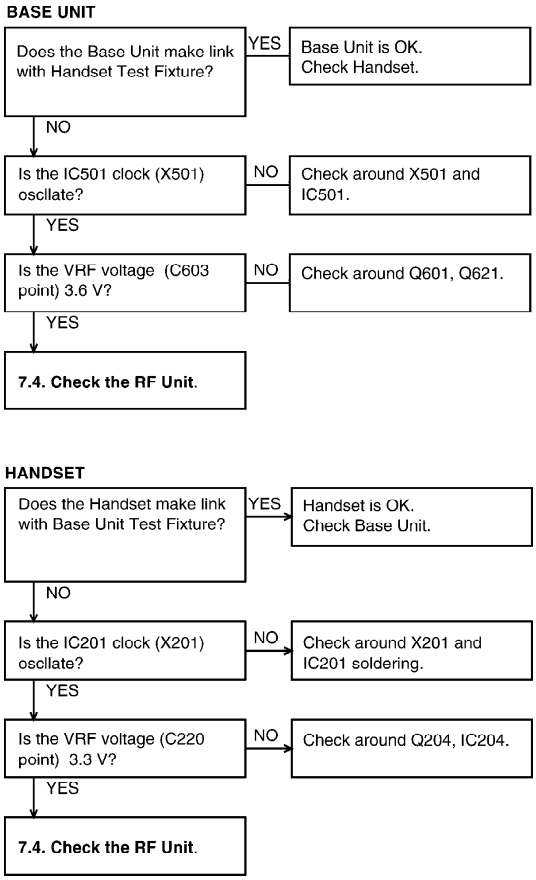

7.4. Check the RF Unit

7.4.1. Finding out the Defective Unit

Prepare HS Test Fixture and BU Test Fixture. Place the HS Test Fixture on the cradle of the base unit for checking, then confirm that they are linked. Place the handset for checking on the cradle of the BU Test Fixture, then confirm that they are linked. How to confirm the link is as follows; press the TALK button and confirm Handset in use is displayed on BU LCD.

7.4.2. Handset Test Fixture for Base Unit

Test Fixture has two modes.

1. TEST mode: (RF Power Low mode)
The switch of Test Fixture changed with TEST mode side.
Then Test Fixture is in TEST mode.

2. Normal mode: (RF Power Normal mode)
The switch of Test Fixture changed with Normal mode side.
Then Test Fixture is in Normal mode.

NOTE:

Audio is coming from Receiver whether switch is TEST mode or

Normal mode.

This test simulates the handset is at very large distance from the base unit and the TX signal from handset to base is very small.
Procedure: First place handset Test Fixture on base under test to charge (exchange security code); then remove handset from base after you hear a beep; then press TALK to operate. The LCD will show TALK. This means that the base unit sensitivity is OK. If a beep is not heard, Replace the RF unit.

NOTE:
1) Only KX-TG2583/2563/2553/2403 with marks HS Test Fixture can be used for troubleshooting. Regular KX-TG2583/2563/2553/2403 production samples do not have the switches needed for troubleshooting.

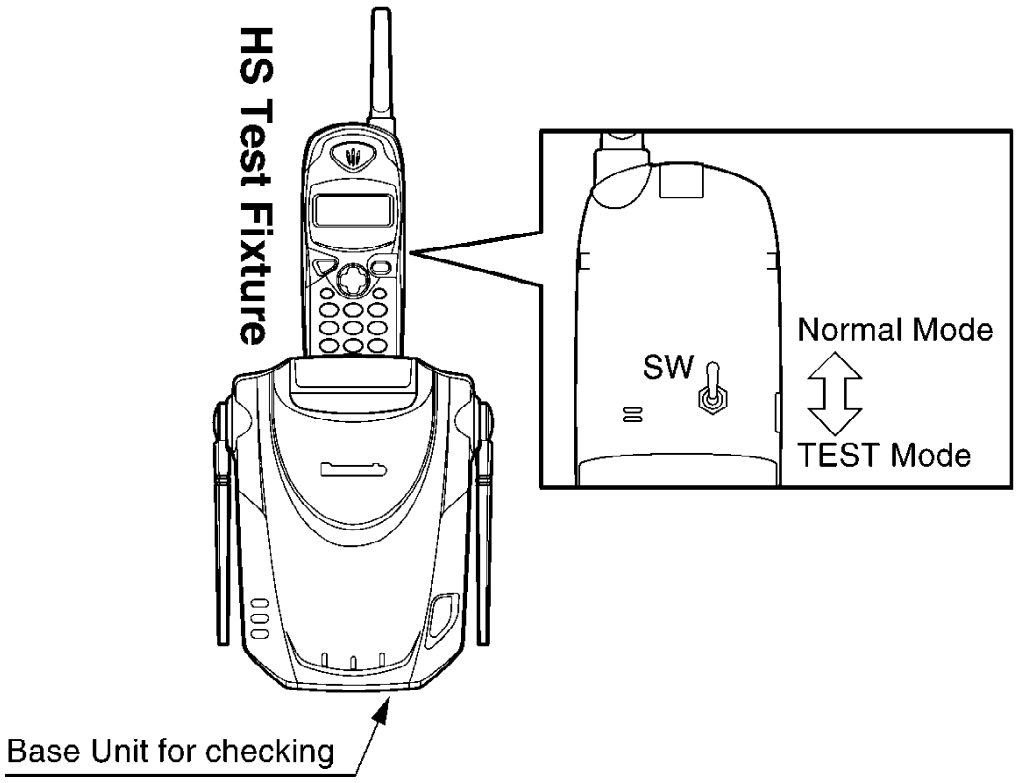

7.4.2.1. Handset Test Fixture Reference Drawing

As for TEST fixture, only the switch as shown in figure is connected to mass production set.

NOTE:

SW: ON (Base Unit: Normal)
10 m more: No Link
5 m less: Link

7.4.3. Base Unit Test Fixture for Handset

Switch to control normal mode and test mode on this BU Test Fixture.
Test Fixture has two modes.

1. TEST mode: (RF Power Low mode)
The switch of Test Fixture changed with TEST mode side.
Then Test Fixture is in TEST mode.

2. Normal mode: (RF Power Normal mode)
The switch of Test Fixture changed with TEST mode side.
Then Test Fixture is in Normal mode.

NOTE:

Audio is coming from Receiver whether switch is inserted or not.

This test simulates the handset is at very large distance from the base unit and the TX signal from base to handset is very small.
Procedure: First, place handset under test to charge (exchange security code), then remove handset from base after you hear a beep. Press TALK button on handset and if it links with the base, then this handset sensitivity is OK. If a beep is not heard, Replace the RF unit.

NOTE:
1) Only KX-TG2583/2563/2553/2403 with marks BU Test Fixture can be used for troubleshooting. Regular KX-TG2583/2563/2553/2403 production samples do not have the software needed for troubleshooting.

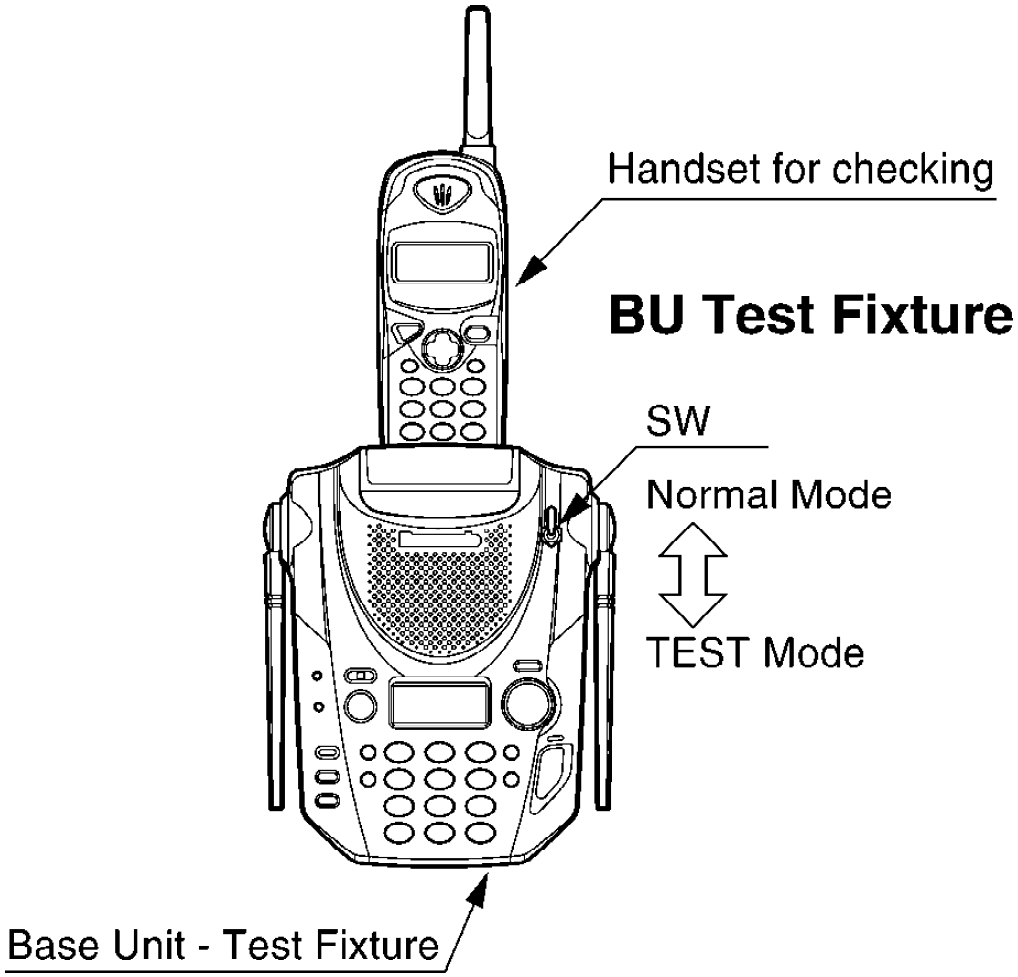

7.4.3.1. Base Unit Test Fixture Reference Drawing

As for TEST fixture, only the switch as shown in a figure is connected to the mass-production set.

Note:
SW : ON (Portable Unit : Normal)
10m more : No Link
5m less : Link

7.4.4. RF Check Flowchart

Each item (1a ~ 6) of RF Check Flowchart is corresponded to Check Table for RF Block. Please refer each item one by one.

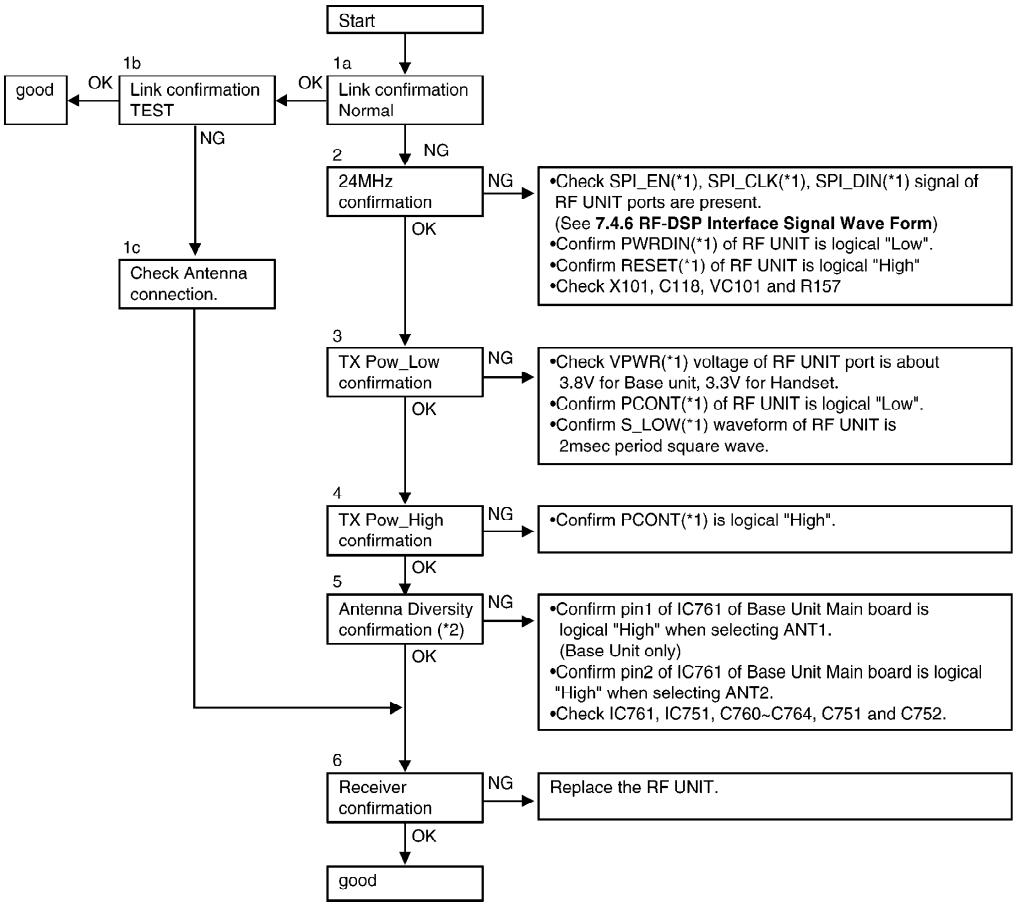

(*1) See RF Unit Reference Drawing (Base Unit and Handset).
(*2) Base unit RF only, refer to Check Table for RF Block.

7.4.5. Check Table for RF Block

No.	Item	BU (Base unit) (*1)	HS (Handset) (*1)
1a	Link confirmation Normal	1. The switch of “HS Test Fixture” is changed to normal mode side, and is charge of "HS Test Fixture". 2. Press [TALK] key of "HS Test Fixture" to establish link about one foot (30cm) away from "Base unit". 3. Confirm to link.	1. The swich of “BU TEST Fix changed to “Normal mode si is charge of "BU Test Fixture 2. Press [TALK] key of "Hand establish link about one foot away from "BU Test Fixture". 3. Confirm to link.
1b	Link confirmation Test	1. The switch of “HS Test Fixture” is changed to TEST mode side, and is charge of "HS Test Fixture". 2. Press [TALK] key of "HS Test Fixture" to establish link about one foot (30cm) away from "Base unit". 3. Confirm to link.	1. The swich of “BU TEST Fix changed to “TEST mode side charge of "BU Test Fixture". 2. Press [TALK] key of "Hand establish link about one foot away from "BU Test Fixture". 3. Confirm to link
1c	Check Antenna connection	1. Check ANT1(*2) and ANT2(*2) soldering. 2. Check ANT1(*2) and ANT2(*2) points are not shorted to GND.	1. Check Antenna(*3) on HS mainboard soldering.
2	24MHz Adjustment	1. Set BU to [Test STANDBY] mode (*5) 2. Confirm X101 frequency within 24MHz ± 720Hz at TP_FREQ(*4) of RF Unit. If X101 frequency is spec out than adjust frequency within 24 MHz ±100 Hz by VC101.	1. Set HS to [Test STANDBY] 2. Confirm X101 frequency wi 24MHz ± 720Hz at TP_FREQ(* Unit. If X101 frequency is spec out adjust frequency within 24 MI Hz by VC101.
3	TX Pow_Low confirmation	1. Put low loss high frequency wire to ANT1(*2) and GND(*2) 2. Connect this wire to Spectrum analyzer. 3. Set BU to [Low Power] mode (*5) 4. Confirm TX power level within -5 ~ + 10dBm	1. Remove Antenna on HS ma Put low loss high frequency v ANT(*3) and GND (*3) 2. Connect this wire to Spectı analyzer. 3. Set HS to [Low Power] mo 4. Confirm TX power level wit 10dBm
4	TX Pow_High confirmation	5. Set BU to [High Power] mode (*5) 6. Confirm TX power level within +20± 4dBm	5. Set HS to [High Power] mo 6. Confirm TX power level wit 4dBm

5	Antenna Diversity confirmation	7. Set BU to [Test STANDBY] mode (*5) 8. Put low loss high frequency wire to ANT2 (*2) and GND (*2) 9. Connect this wire to Spectrum analyzer 10. Press [1] key to activate the ANT2. 11. Set BU to [High Power] mode (*5) 12. Confirm TX power level within +20± 4dBm	
6	Receiver confirmation	Same as Item 1b.	Same as Item 1b.

(*1) BU: Base Unit, HS: Handset.
(*2) See Base Unit Reference Drawing 1.
(*3) See Handset Reference Drawing.
(*4) See RF Unit Reference Drawing (Base Unit and Handset).
(*5) See TEST MODE AND ADJUSTMENT.

7.4.6. RF-DSP Interface Signal Wave Form

(1) Serial control line

<Standby mode>

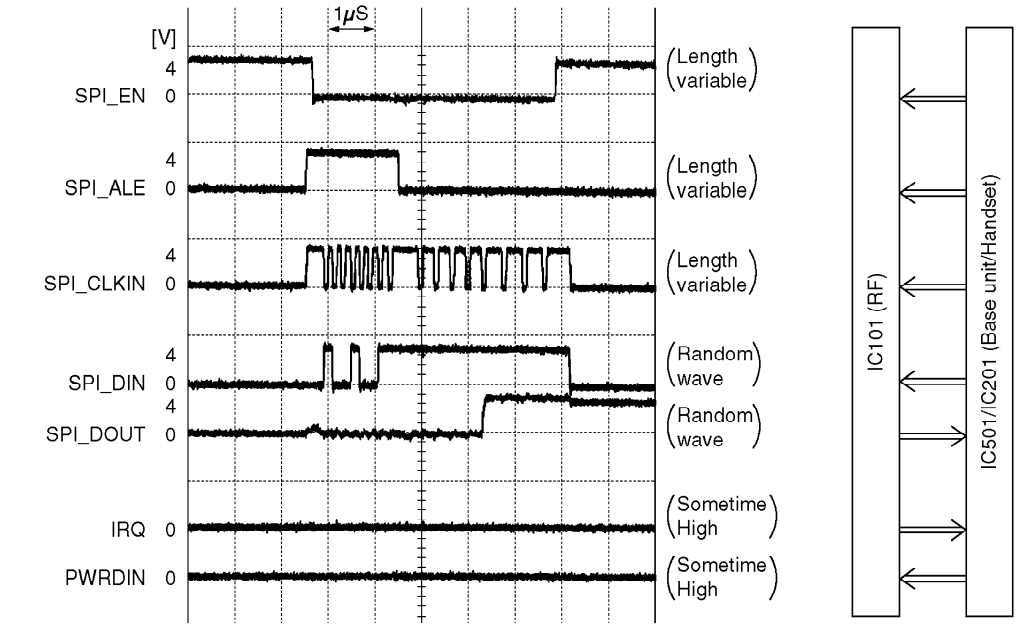

(2) ADPCM (Digital sound) line

<Standby mode>

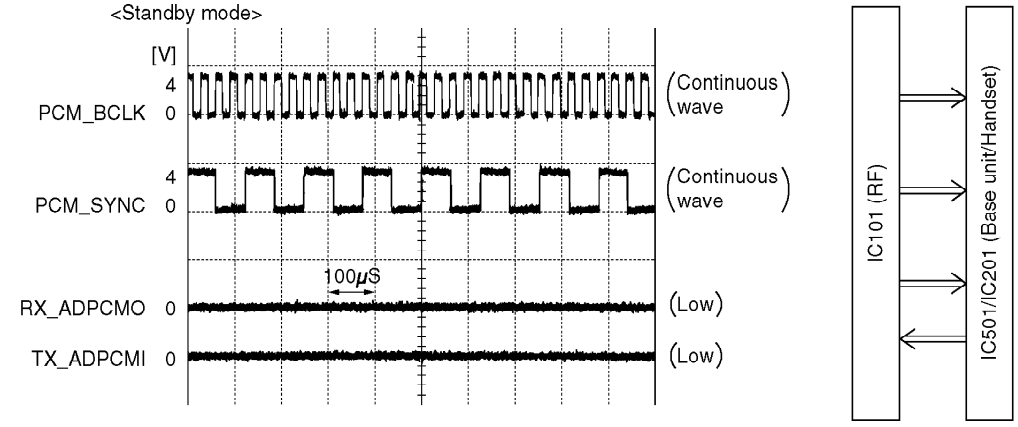

<Talk mode>

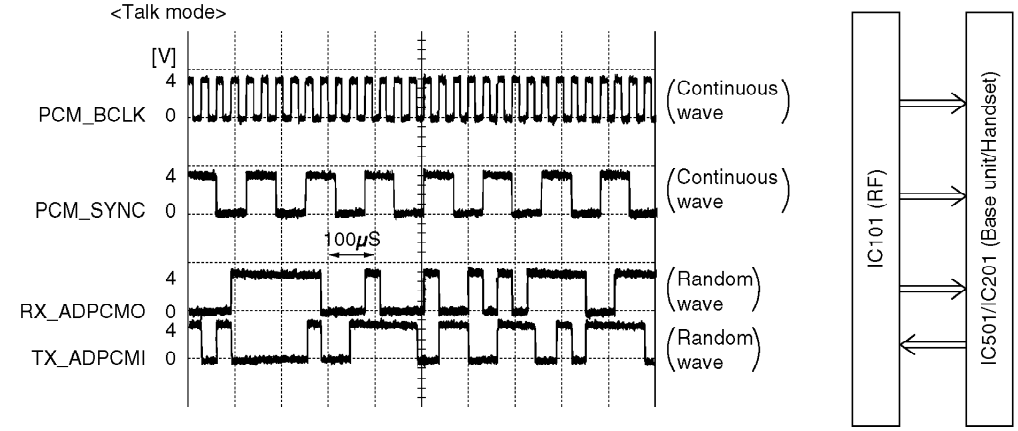

7.5. Check Handset Voice Transmission

HANDSET

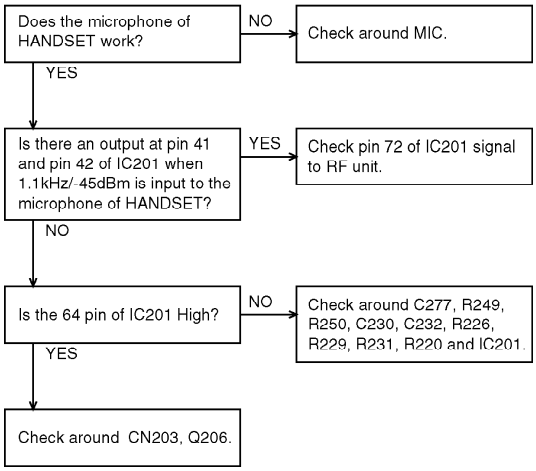

BASE UNIT

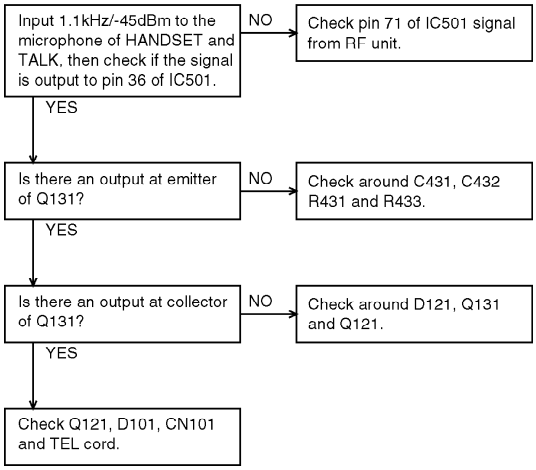

7.6. Check Handset Voice Reception

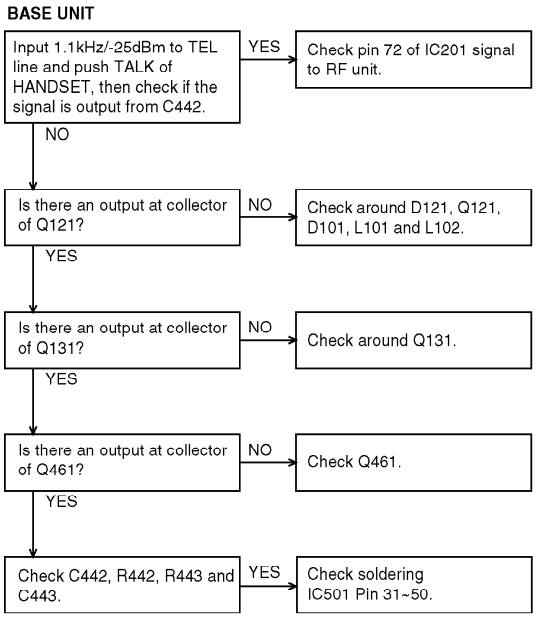

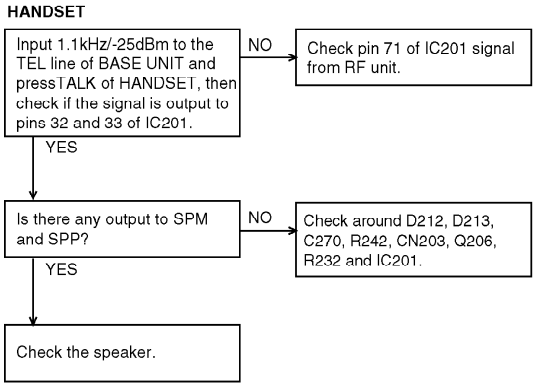

7.7. Check Call ID

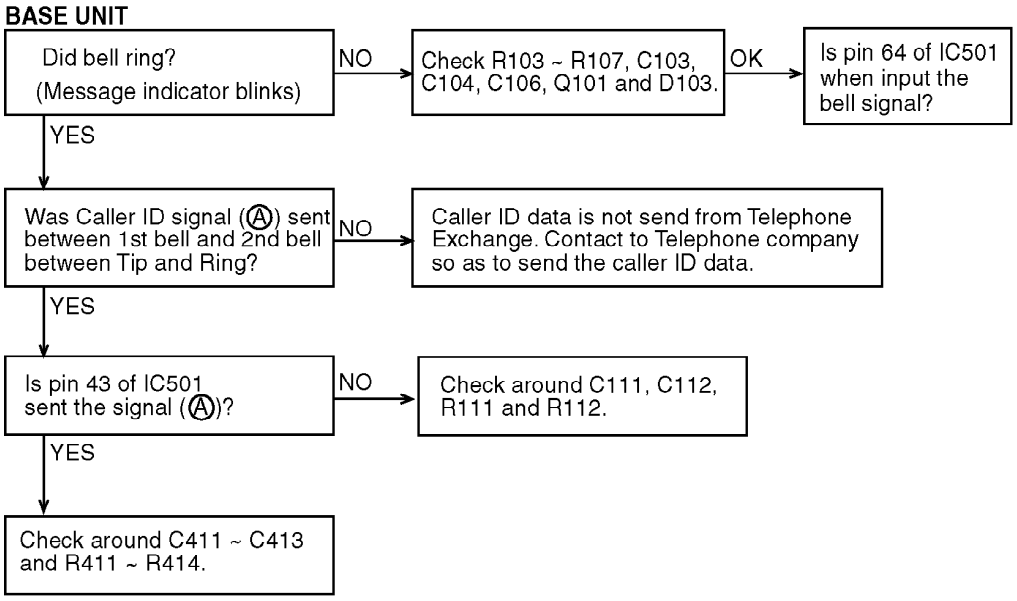

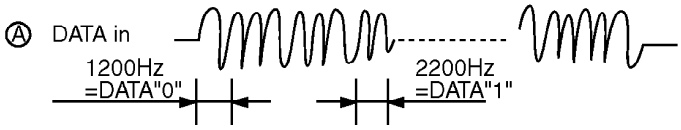

8. TEST MODE AND ADJUSTMENT

8.1. Test Mode Flow Chart for Base Unit

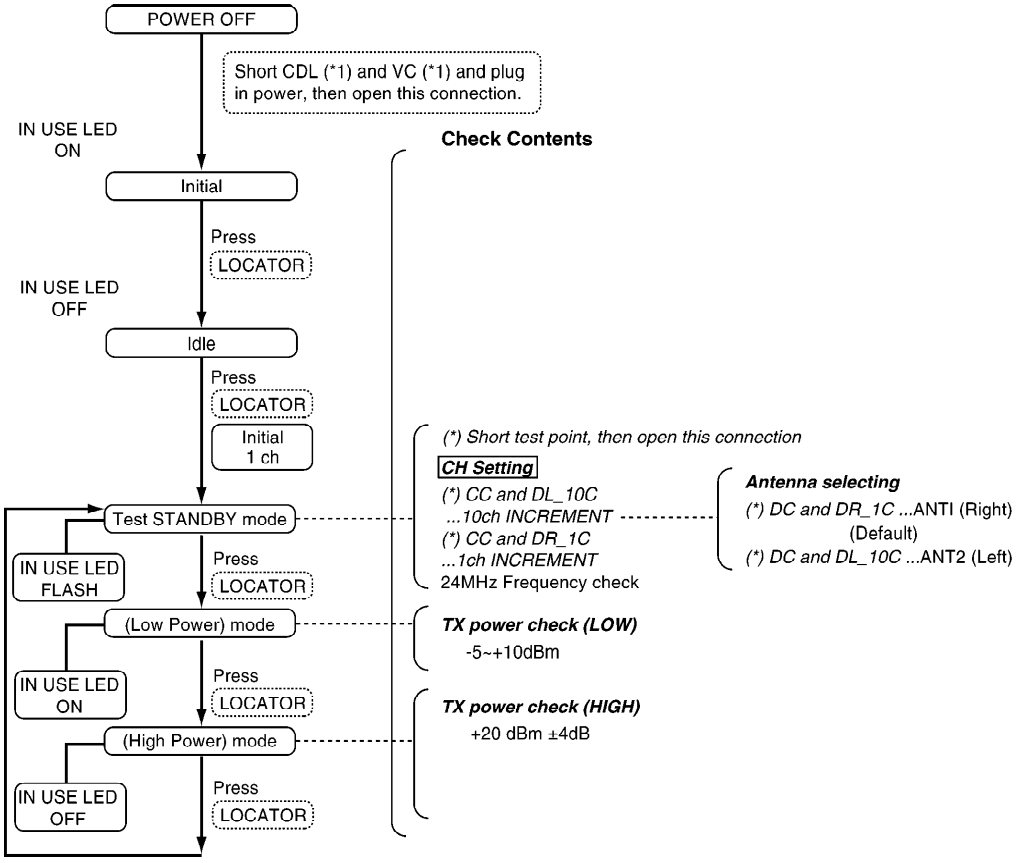

(*1) See Base Unit Reference Drawing 1.
(*2) Special check method for Base Unit individually.

8.2. Test Mode Flow Chart for Handset

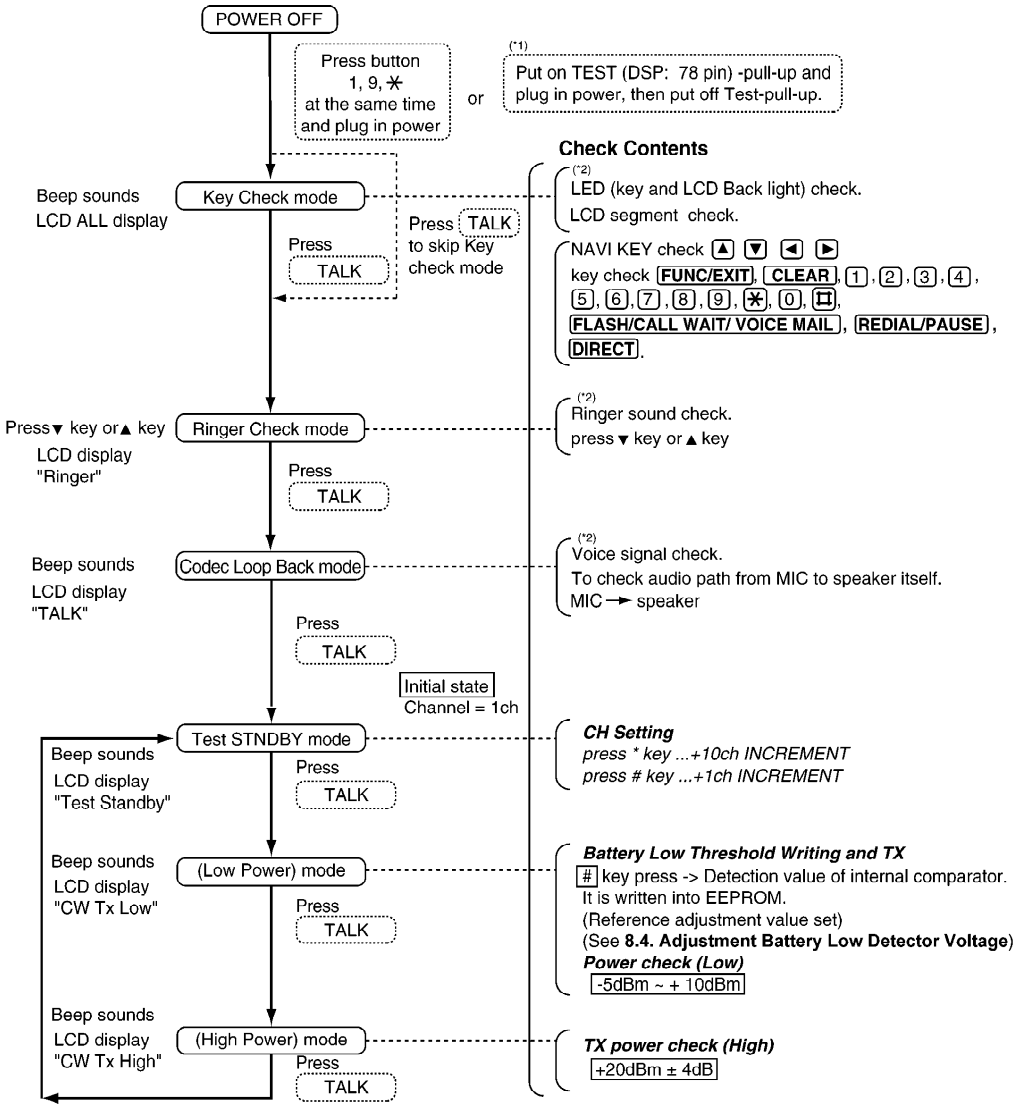

(*1) See Handset Reference Drawing.
(*2) Special check method for Handset individually.

8.3. Adjustment Battery Low Detector Voltage

After replacing handset's DSP (IC201) and EEPROM, Re-writing Battery Low voltage to EEPROM is required.
Following Test mode flow chart (Refer to Test Mode Flow Chart for Handset),
DC power supply and Battery connector are required in this adjustment.
1. Set 3.9V for DC power supply.
2. Place handset in test mode.
3. Press "TALK" key 4 times to TX-Low mode. (CW Tx Low is displayed on LCD)
4. Set 3.51V for DC power supply.

*** Check voltage at battery connector, because some voltage drop is happened, using long or thin cable.**

5. Press "#" key to write voltage value in EEPROM.

6. Turn power off. Then this value is available.

NOTE

Refer to Handset Reference Drawing for connection of DC power source and voltmeter.

8.4. Base Unit Reference Drawing 1

8.5. Base Unit Reference Drawing 2

8.6. Handset Reference Drawing

8.7. Frequency Table

(TDD: time division duplex)

Channel	TX/RX Frequency (GHz)	Channel	TX/RX Frequency (GHz)
1	2.4015	13	2.4375
2	2.4045	14	2.4405
3	2.4075	15	2.4435
4	2.4105	16	2.4465
5	2.4135	17	2.4495
6	2.4165	18	2.4525
7	2.4195	19	2.4555
8	2.4225	20	2.4585
9	2.4255	21	2.4615
10	2.4285	22	2.4645
11	2.4315	23	2.4675
12	2.4345	24	2.4705

9. DESCRIPTION

9.1. Frequency

The frequency range of 2.4015 GHz ~ 2.4705 GHz is used. Transmitting and receiving channels between base unit and handset is same frequency. Refer to the Frequency Table.

9.2. Time Division Duplex (TDD) operation

Transmission/reception between the base unit and handset is performed by time-sharing as shown in Fig. 7. 1 slot time of transmission and reception is 1mS. Same frequency is used in transmitting and receiving. The figure shows an example; the frequency of 1ch is used in

transmitting between the base unit and handset.

Fig. 7

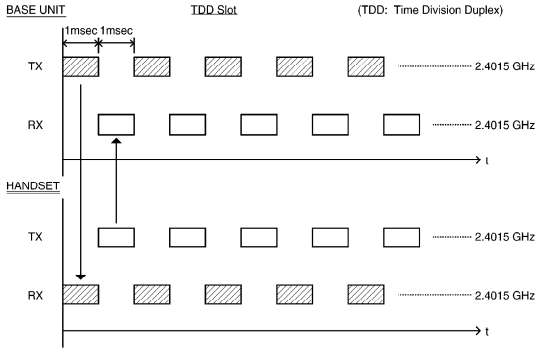

9.2.1. TDD Frame Format

The TDD frame is 2mS in length, and is composed of two symmetrical 960 μ S TX and RX subframes. Each subframe contains 96 bits of 10 μ S duration, with 40 μ S guard times between both TX and RX subframes.
Each subframe consists of the following five fields:

- **A 12-bit Preamble field**
- **An 8-bit Data Channel field**
- **An 8-bit Sync Word**
- **A 64-bit ADPCM Payload**
- **A 4-bit Post-amble**

Both the 8-bit sync word and 8-bit data channels are programmable via the DSP interface. In addition, the 64-bit payload can be filled either with ADPCM voice data, or can be used by the host DSP as a fast data channel between base and handset.

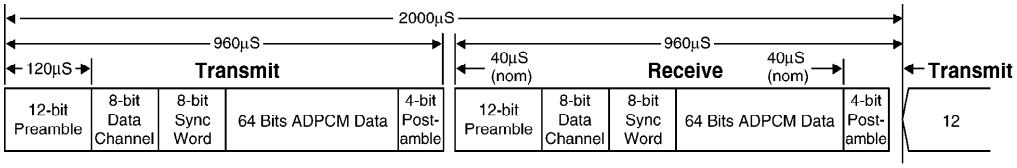

9.3. Spread Spectrum

Transmission and reception are operated using the spread spectrum method.
DSS (Digital Spread Spectrum)
Mixing the original signal with the pseudo random noise code (PN code) works the spread spectrum. In this system PN code is 15 chip. Although the band width is spread fifteen times, the power level per channel becomes lower.

Fig. 8

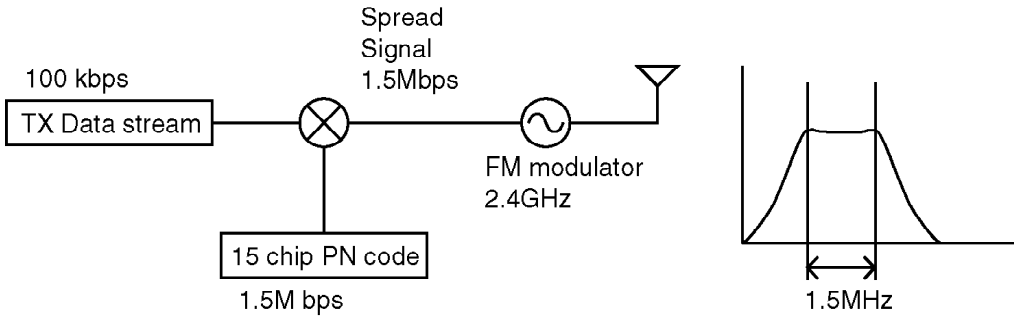

9.4. Signal Flowchart in the Whole System

Reception

CN101 of the base unit is connected to the TEL line, and the signal is input through the bridge diode D101. While talking the relay (Q121) is turned ON and amplified at the amplifiers Q461, then led to DSP (IC501). DSP generates ADPCM signal. The ADPCM signal is input to RFIC (IC101) of RF UNIT, and is mixed with pseudo random noise code (PN code) to spread the spectrum. RFIC outputs FSK modulated RF signal. The RF signal is passed through the balun (T101) and filter (L107) to the T/R switch (IC109). And the RF signal amplifies by the power amplifier (IC105) and fed into T/R switch (IC110) and passes through filter (L106) to Diversity ANTENNA. As for the handset, RF signal from the antenna passes through filter (L106) and switch by T/R switch (IC110) to LNA (IC106). The RF signal is amplified by LNA (IC106) and switched by T/R switch (IC109) and input to RFIC passing through filter (L107) and the balun (T101) to perform the de-spread, then input to DSP (IC201). DSP performs ADPCM decoding to convert the signal into the voice signal, then it is output to the speaker.

Transmission

The voice signal input from the microphone is led to DSP (IC201). The DSP generates ADPCM signal. As well as the reception, it is converted into the RF signal by RFIC (IC101). Passing through the balun (T101) and filter (L107), to the T/R switch (IC109). And the RF signal amplifies by the power amplifier (IC105) and fed into T/R switch (IC110) and passes through filter (L106) to ANTENNA. As for the base unit, RF signal from the Diversity antenna passes through filter (L106) and switch by T/R switch (IC110) to LNA (IC106). The RF signal is amplified by LNA (IC106) and switched by T/R switch (IC109) and is input to RFIC (IC101) passing through filter (L107) and the balum (T101) to perform the de-spread, then input to DSP (IC201). DSP performs ADPCM decoding to convert the signal into the voice signal. The voice signal is amplified at the TX amplifier (Q131), then output to the TEL line (CN101) through the relay (Q121) and bridge (D101).

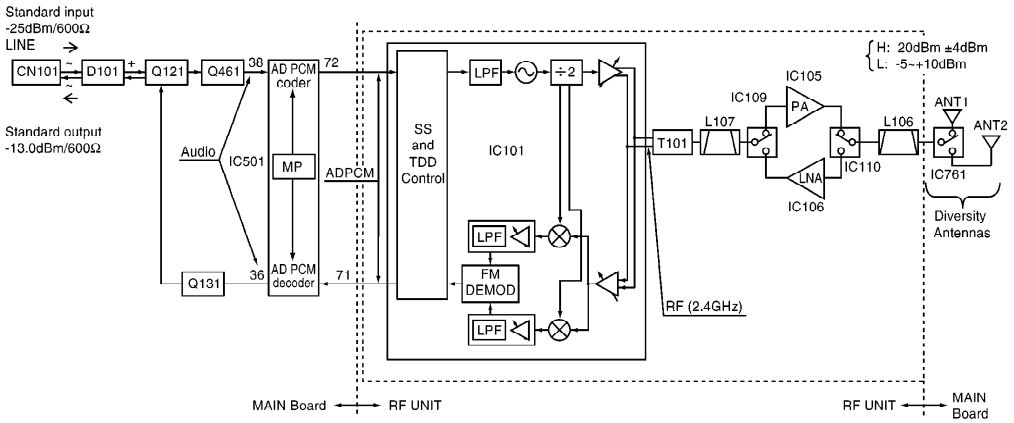

Fig. 9-1 BASE UNIT

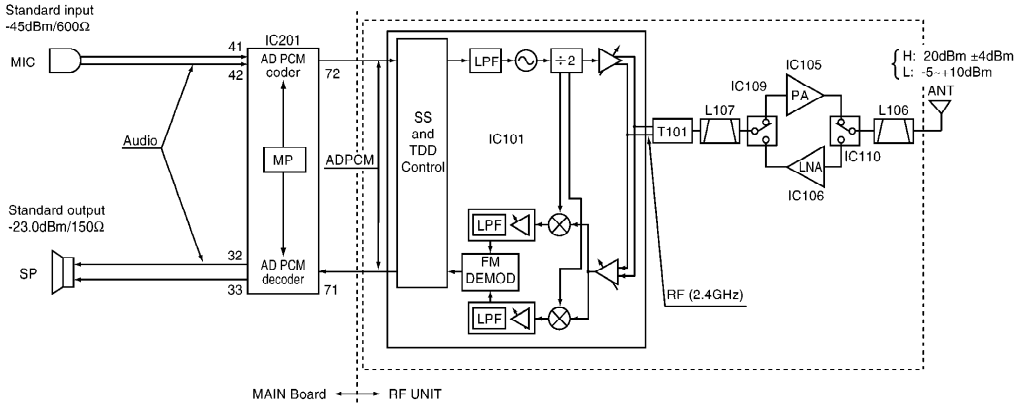

Fig. 9-2 HANDSET

9.5. EXPLANATION OF DSP DATA COMMUNICATION

9.5.1. Calling

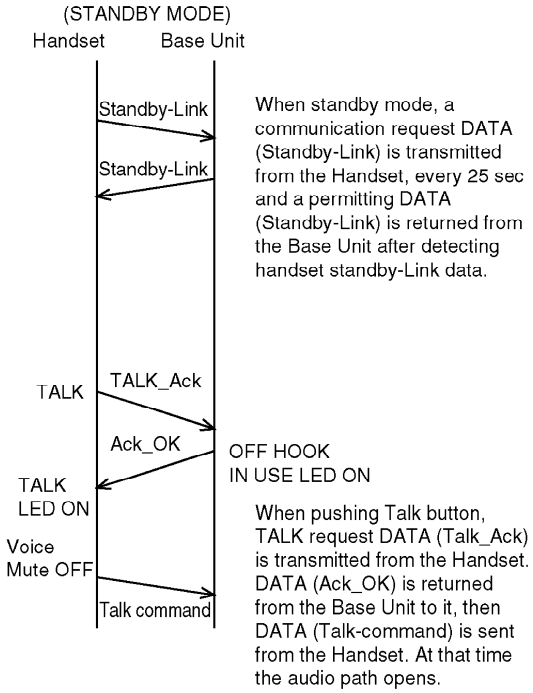

9.5.2. To Terminate Communication

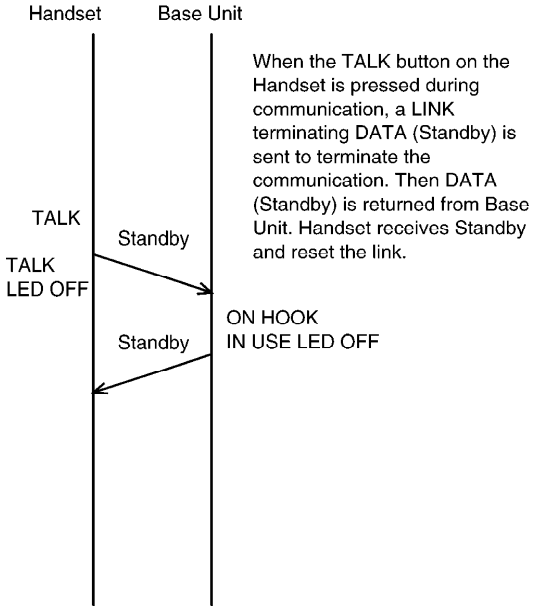

9.5.3. Ringing

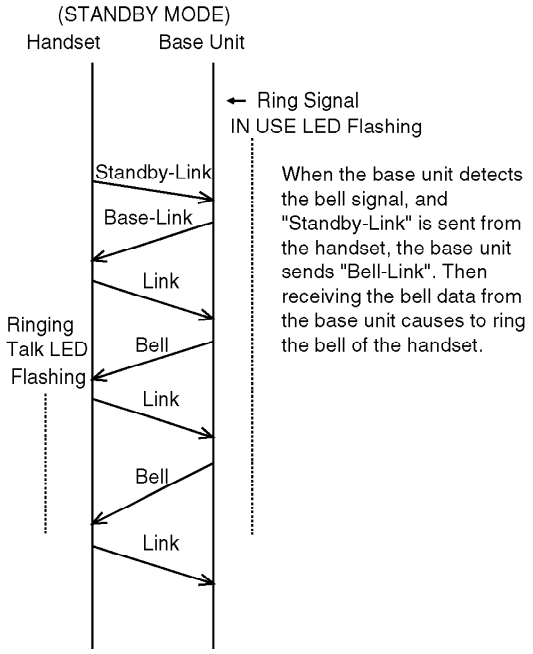

9.5.4. ID CHANGE

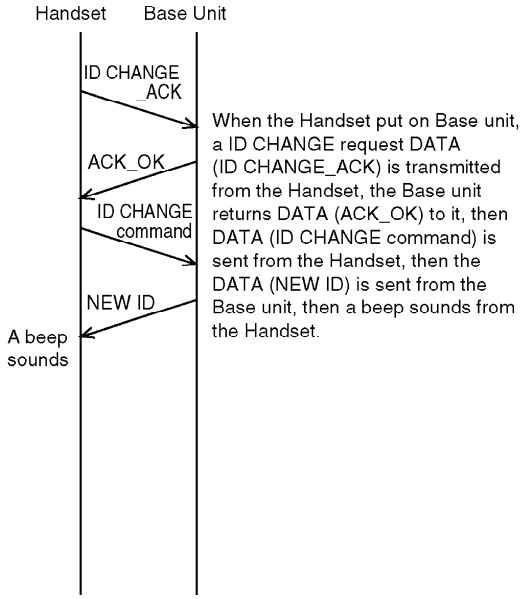

10. TERMINAL GUIDE OF IC'S, TRANSISTORS AND DIODES

10.1. Base Unit

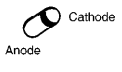 PQVDRLZ2R0 PQVDRLZ20A	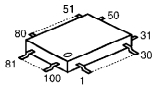 C2HBBH000018	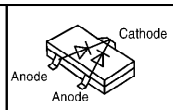 MA153	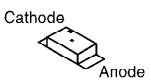 LNJ308G8JRA PQVDEL1921SR	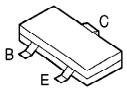 2SD1819A	PQVIXCF4502P PQVITC7W74U
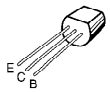 2SC2120 PQVT2N6517CA 2SA1625	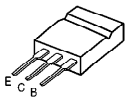 2SD2136	PQVDS1ZB60F1	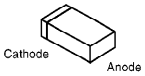 PQVDHRU0203A, MA8043, MA8082, MA111, MA8051, MA8036H, MA8220, MA8075		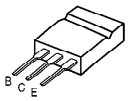 2SD2137
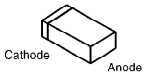 PQVTDTC123JU	PQWITG2553BH	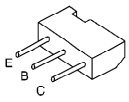 2SD1994A	PQVIPS3432UT	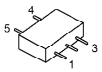 PQVITC7S08FU	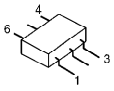 PQVISPM3204T

10.2. Handset

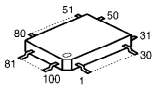 C2HBBH000015	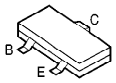 PQVTD123T146, PQVTDTC143E PQVDTA143TU, 2SD1819A,UN521	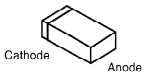 PQVD1SR154 MA2ZD1400 MA8150, MA111	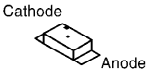 LNJ308G8JRA	PQWITG2553BR
2SA1797Q	PQVIXCP3302M	PQVIC62FP33M	PQVIC61CN32N	

11. BLOCK DIAGRAM (Base Unit)

12. CIRCUIT OPERATION (Base Unit)

12.1. Power Supply Circuit

Function:

Power from the AC adaptor passes through a regulating consisting of IC301.

Circuit Operation:

IC301 is a regulated power supply. The voltage at point A is regulated to 4.5 V by IC301.

The voltage at point B is dropped by D509 to 4.1 V.

The voltage at point C is dropped by D521 to 3.8 V.

The voltage at point E is dropped by Q601 to 3.6V

Circuit Diagram

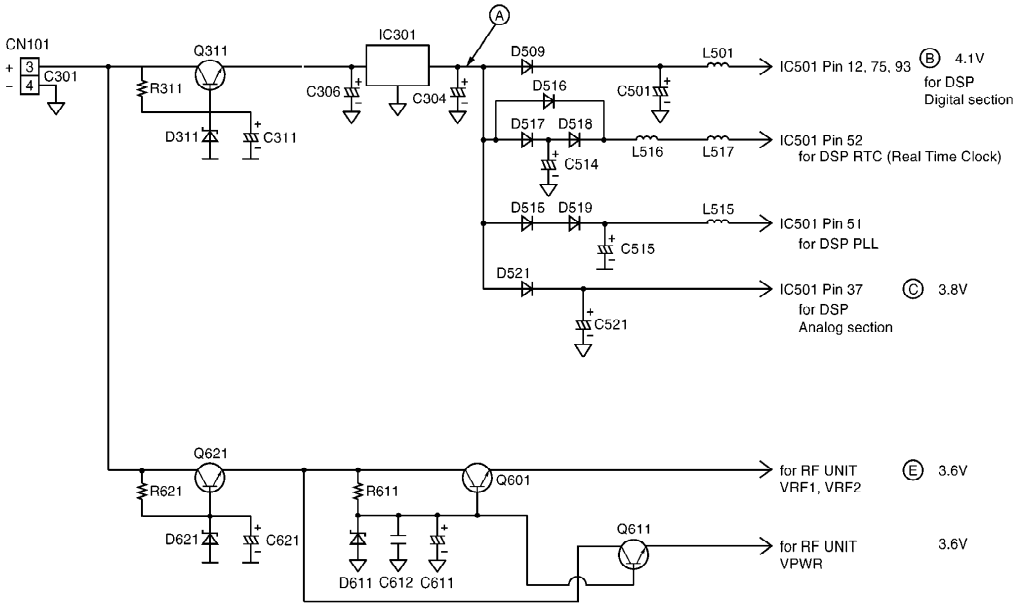

12.2. DTMF Signal

When the DTMF data from the Handset is received, the DTMF signal is output from pin 36 of IC501 and sent to the line through Q131.

12.3. Line Sending Signal

The coded signal input from the RF unit is decoded by IC501.

The audio signal output from IC501-36 and is input to telephone line.

Circuit Diagram

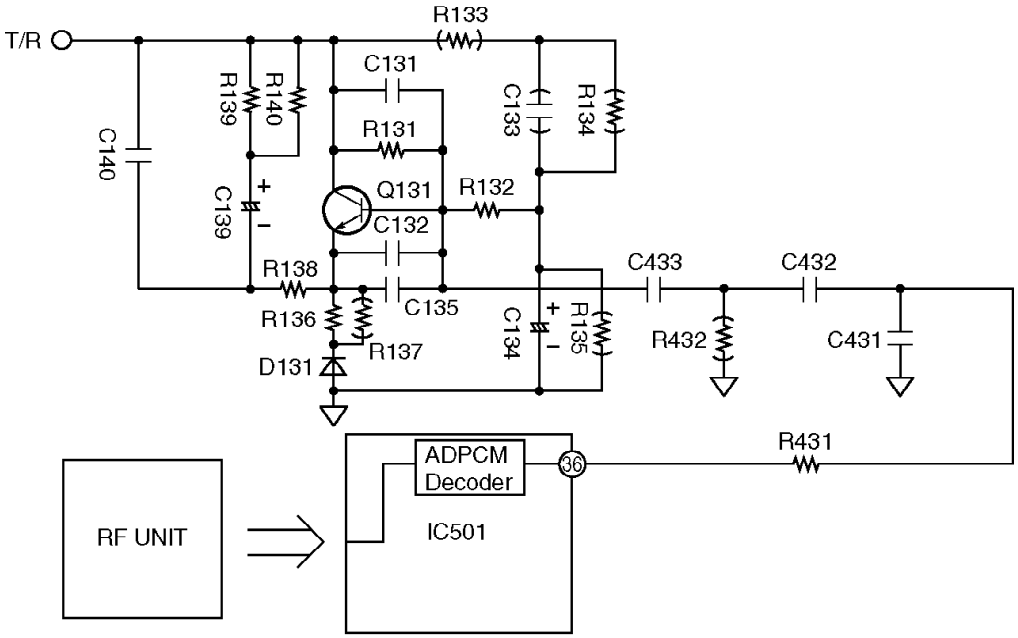

12.4. Line Receiving Signal

The audio signal from line passes through Q131 and Q461 to pin38 and 39 of IC501(DSP). IC501 modulates this input audio signal to output to the RF unit.

Circuit Diagram

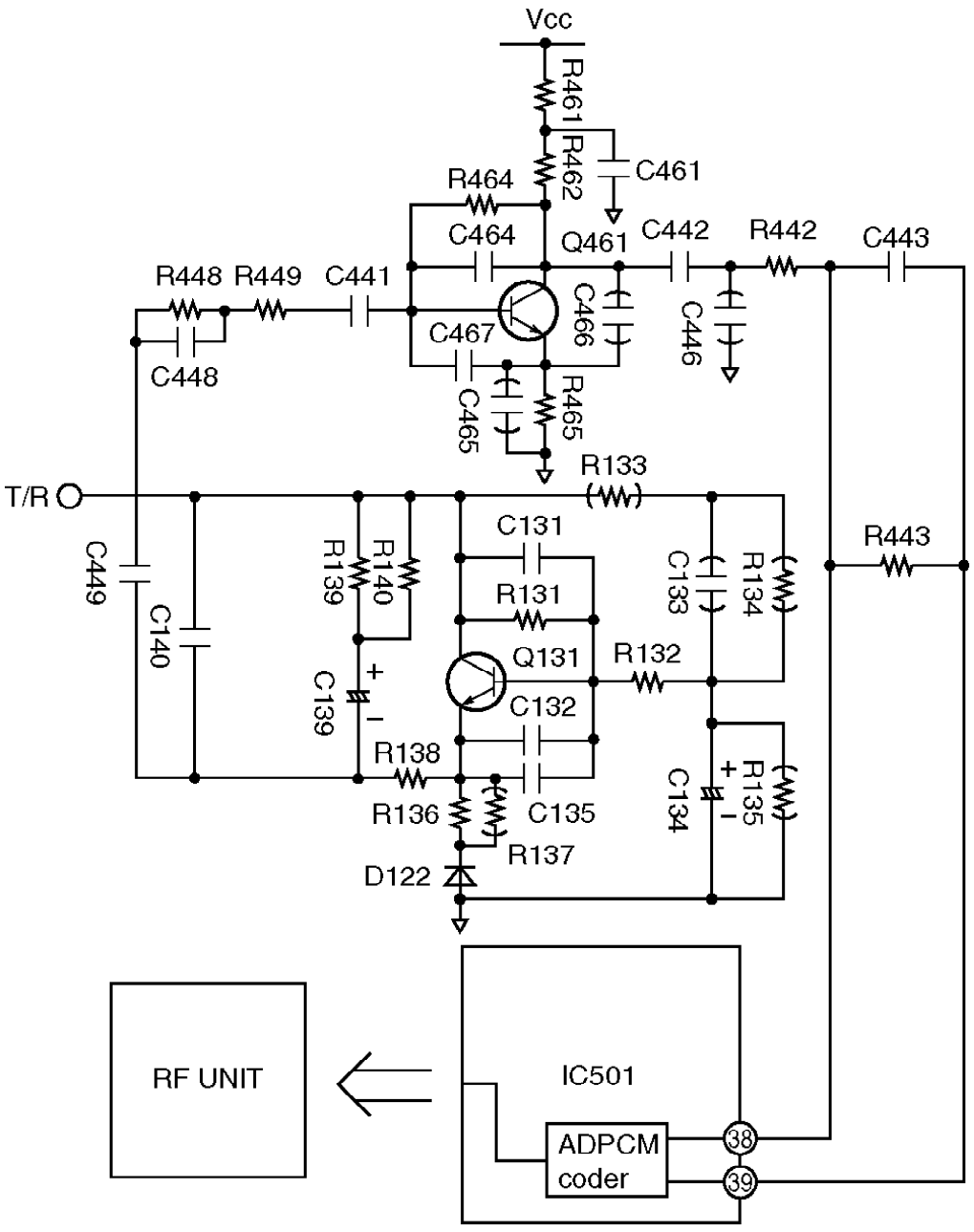

12.5. Calling Line Identification Circuit (Caller ID)

Function:

The caller ID is a chargeable ID which the user of a telephone circuit obtains by entering a contract with the telephone company to utilize a caller ID service. For this reason, the operation of this circuit assumes that a caller ID service contract has been entered for the circuit being used.

The data for the caller ID from the telephone exchange is sent during the interval between the first and second rings of the bell signal. The data from the telephone exchange is a modem signal which is modulated in an FSK (Frequency Shift Keying) format. Data “0” is a 1200 Hz sine wave, and data 1 a 2200 Hz sine wave.

There are two type of the message format which can be received: i.e. the single message format

and plural message format. The plural message format allows to transmit the name and data code information in addition to the time and telephone number data.

● Single message format

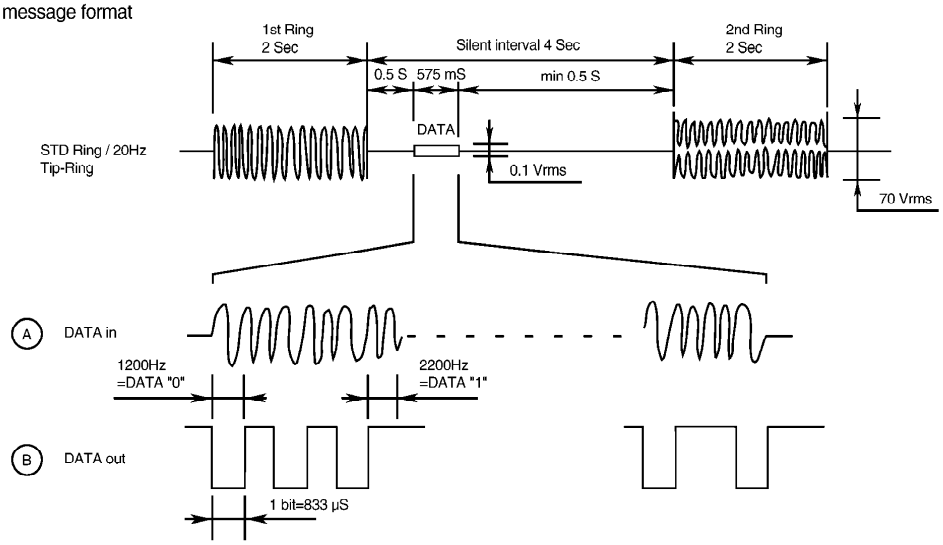

month	day	hour	minute	number
04	15	16	35	2013487000

● Plural message format

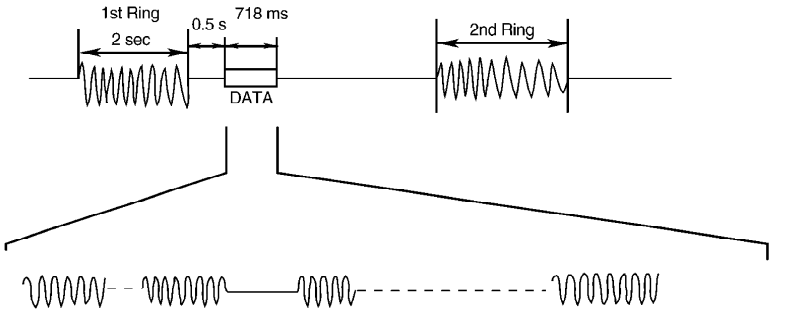

DATA CODE	NAME
201	John Smith

month	day	hour	minute	number
04	16	16	35	2013487000

Call Waiting

Calling Identity Delivery on Call Waiting (CIDCW) is a CLASS service that allows a customer, while off-hook on an existing call, to receive information about a calling party on a waited call. The transmission of the calling information takes place almost immediately after the customer is alerted to the new call so he/she can use this information to decide whether to take the new call.

Function:

The CAS signal flows from T/R → R111, R112 → C111, C112 → IC501 pins 41~43 and the ACK (DTMF signal) is returned to the telephone exchange. The telephone exchange that received the ACK can send the data in the same manner as the caller ID. If the unit deems that a telephone connected in parallel is in use, ACK is not returned even if CAS is received, and the information for the second and subsequent callers is not displayed on the portable handset display.

Call Waiting Format

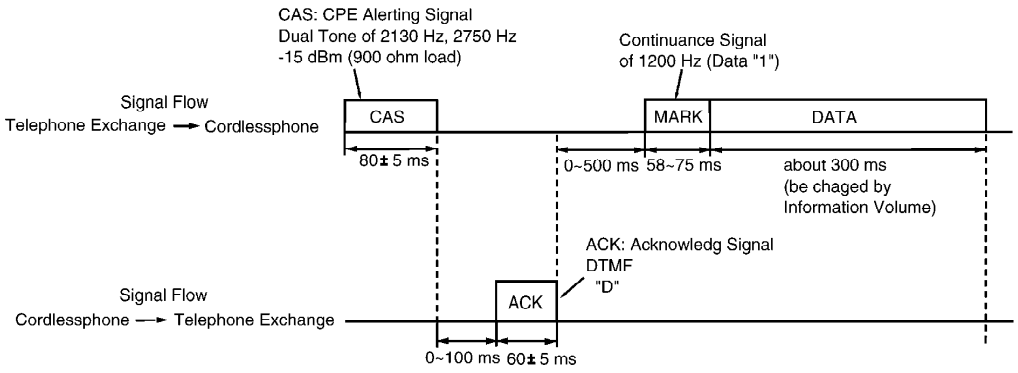

Circuit Diagram

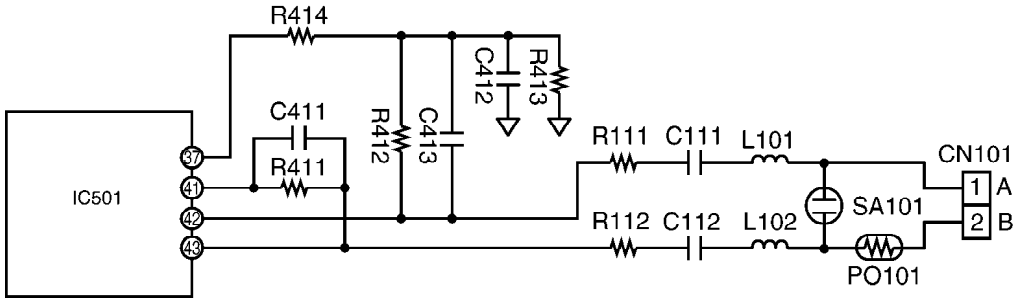

12.6. Parallel Connection Detection Circuit

Function:

In order to disable call waiting and stutter tone functions when using telephones connected in parallel, it is necessary to have a circuit that judges whether a telephone connected in parallel is in use or not. This circuit determines whether the telephone connected in parallel is on hook or off hook by detecting changes in the T/R voltage.

Circuit Operation:

Parallel connection detection when on hook:

When on hook Q115 is ON, the voltage is monitored pin 40 of IC501. There is no parallel connection if the voltage is 1.65 V or higher, while a parallel connection is deemed to exist if the voltage is lower.

Parallel connection detection when off hook:

When off hook Q115 is OFF, the voltage is monitored pin 40 of IC501; the presence/absence of a parallel connection is determined when the voltage changes by 0.2 V or more.

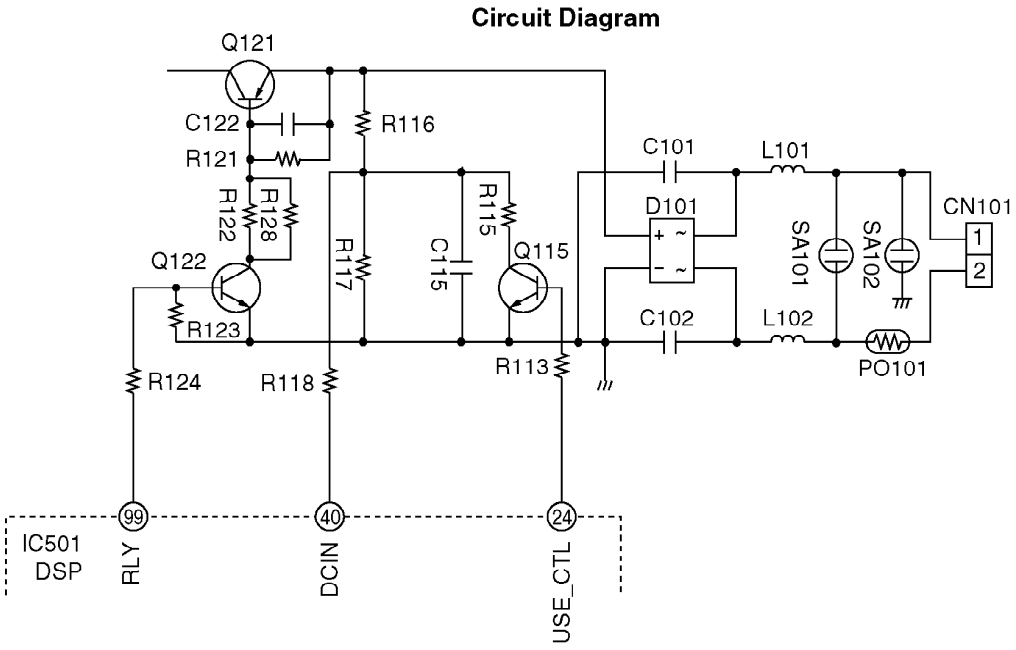

12.7. Telephone Line Interface

Circuit Operation:

- **ANSWER**

  In the idle mode, Q121 is open to cut the DC loop current and decrease the ring load. When ring voltage appears at the Tip (T) and Ring (R) leads (When the telephone rings), the AC ring voltage is transferred as follows:

  T → L101 → R103 → C103 → Q101 → IC501 pin 64.

  When the CPU (DSP) detects a ring signal, Q121 turns on, thus providing an off-hook condition (active DC current flow through the circuit) and the following signal flow is for the voice signal.

  T → D101 → Q121 → Q131 → R139/R140 → C139 → RX

- **ON HOOK**

  Q121 is open, Q121 is connected as to cut the DC loop current and to cut the voice signal. The unit is consequently in an on-hook condition.

- **SPECIFICATIONS**

  In the on-hook state (idle), the current flows between the telephone line and the unit is as follows:

  T → L101 → R103 → C103 → R106 → C104 → R104 → L102 → PO101 → R.

  The DC component is blocked by C103, C104: thereby providing an on-hook condition.

The AC interface impedance is over 47 k Ω ; thus, satisfying the telephone company requirements.

Circuit Diagram

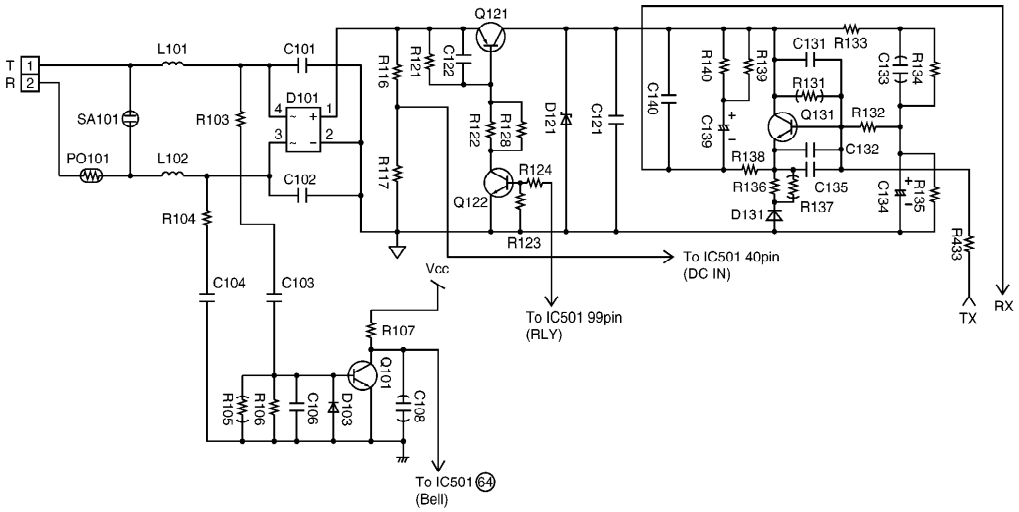

12.8. Initializing Circuit

Function:

This circuit is used for to initialize the microcomputer when it incorporates an AC adaptor.

Circuit Operation:

When the AC Adaptor is inserted into the unit, then the voltage is shifted by IC301, D509 and power is supplied to the DSP.

The set can operate beyond point A in the circuit voltage diagram.

Circuit Diagram

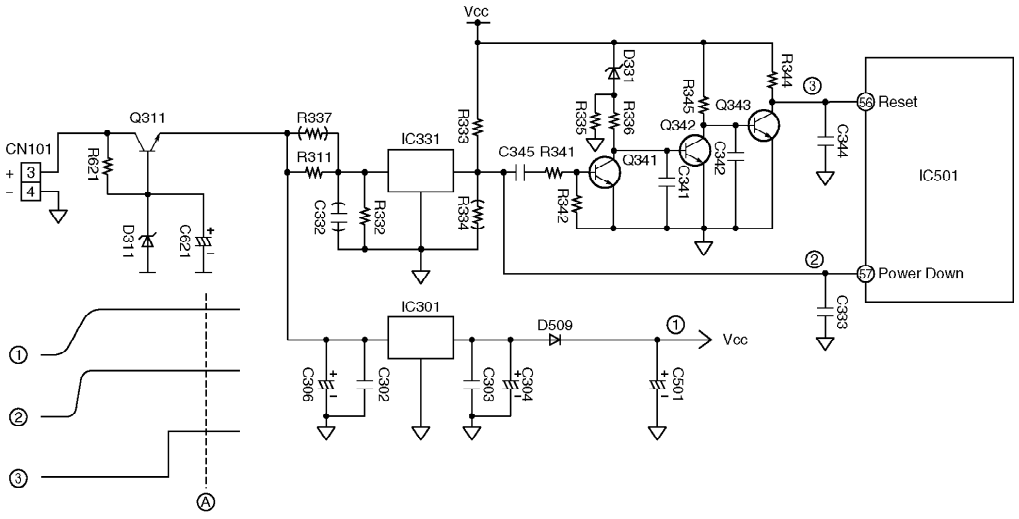

12.9. Antenna Diversity

Antenna Diversity improve conversation quality. This means to reduce some noise during conversation. RF unit send LQA (Link Quality Alarm) signal to IC751 when increase Error Bit's. Then IC751 control RF switch IC761 to switch another Antenna.

Antenna selection control by IC501 is available only in test mode.

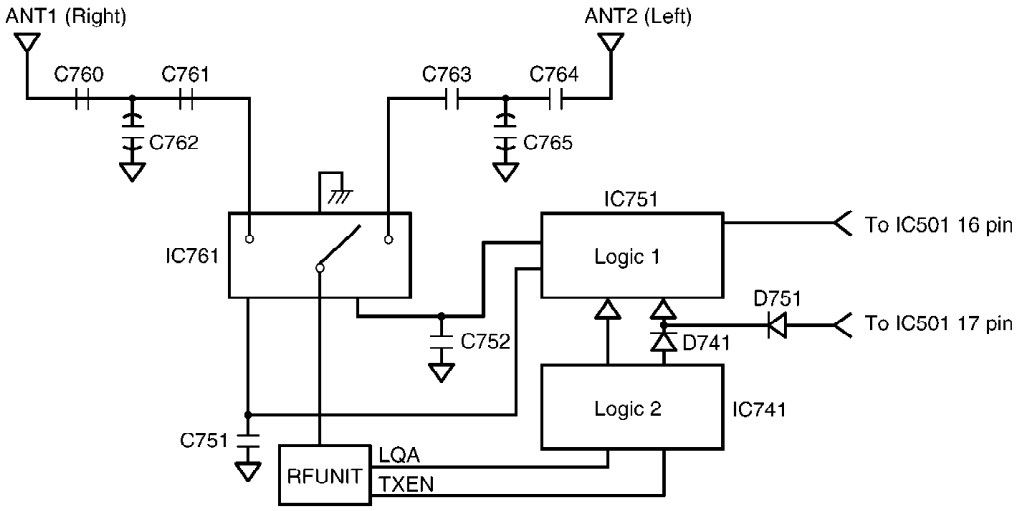

13. BLOCK DIAGRAM (Handset)

14. CIRCUIT OPERATION (Handset)

14.1. Power Supply Circuit

Voltage is supplied separately to each block.

14.2. Charge Circuit

Ni-cd battery is connected to CN202. When the handset is put on the cradle of the base unit, the power is supplied from CHARGE1 and CHARGE2 terminals to charge the battery. Q207 detects the voltage of CHARGE1 and CHARGE2 terminals, then the handset makes ID code setting (*) with the base unit.

14.3. Ringer Circuit

If the ringer volume is set to low and an alarm tone is output from 39 pin, IC201 DSP and input to Q209. Then Q208 is turned off. If the ringer volume is set to high, Q208 turns on and results in a louder beep tone.

Circuit Diagram

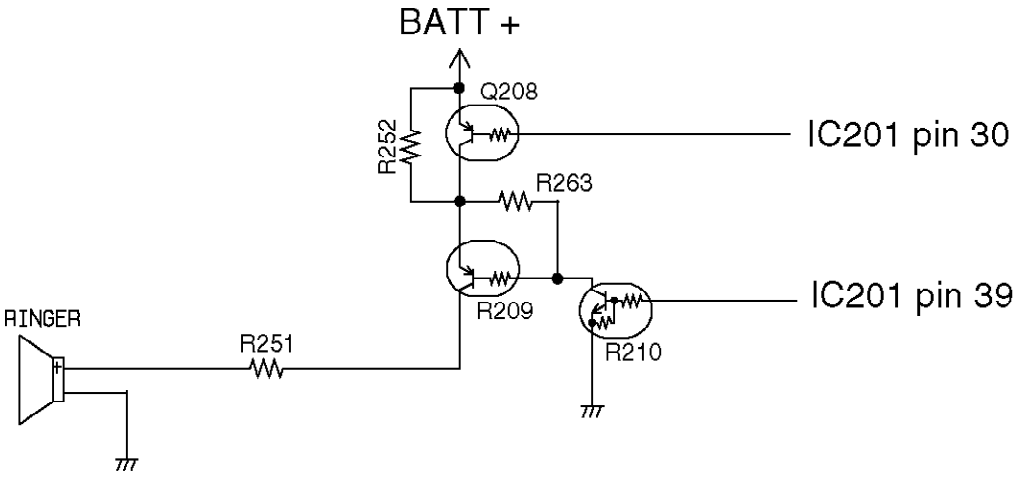

14.4. Sending Signal

The voice signal from the microphone input to pin 42 (CIDIP) and pin 41(CIDIN) of IC201 (DSP). CN203 is the headphone jack. When the headphone is connected, the Q206 detect it. The input from the microphone of the handset (CIDIN, CIDIP) is cut and the microphone signal from the headphone is input to pin 47 of IC201 (HMIN). Also the power for the microphone is supplied from Q211, and the power is turned OFF on standby.

Circuit Diagram

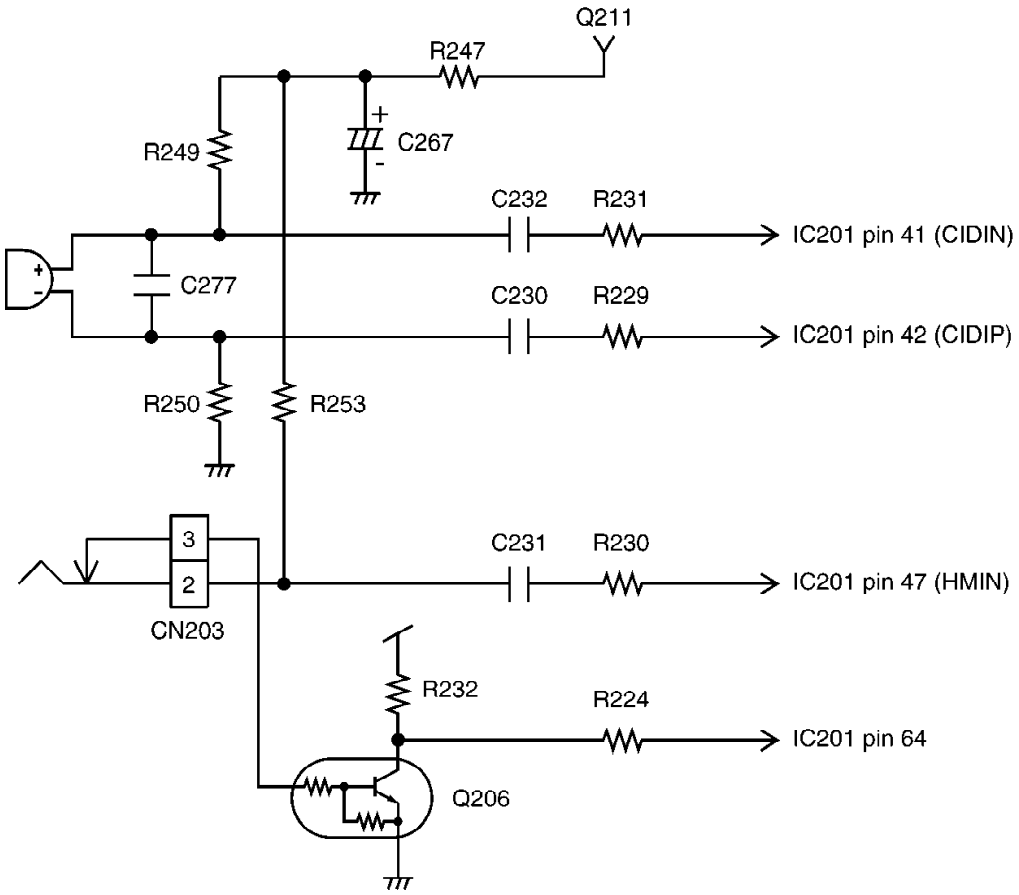

14.5. Reception Signal Circuit

The received signal from the base unit is output from pins 33 (SPN) and 32 (SPP) of IC201 (DSP) as the voice signal. SPN is the inverse output of SPP, and the speaker is driven by SPN and SPP. CN203 is the headphone jack. When the headphone is connected to this jack, the output to the speaker of the handset (SPN,SPP) is cut and the voice signal is output to the headphone (HSOUT) only.

Circuit Diagram

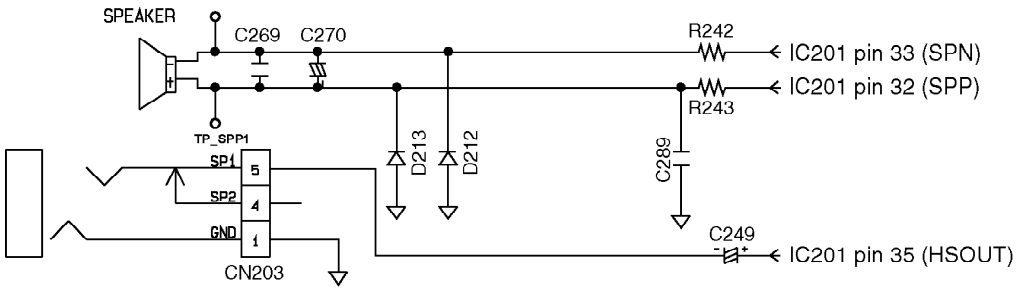

15. CPU DATA (Base Unit)

15.1. IC501

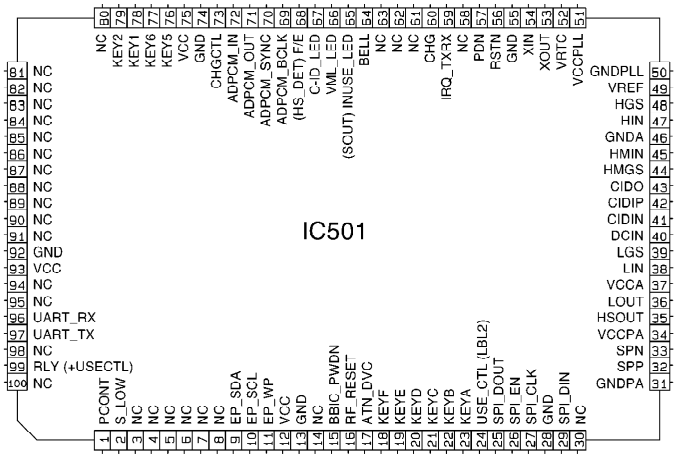

Pin	Description	I/O	High	Hi-z	Low
1	PCONT	D.O	pin2-Hi-z:High Power pin2-L : -	-	pin2-Hi-Z:Low Power pin2-L:Super Low Power
2	S_LOW	D.O	-	pin1-H:High Power pin1-L:Low Power	pin1=H : - pin1=L:Super Low Power
3	NC	D.O	-	-	-
4	NC	D.O	-	-	-
5	NC	D.O	-	-	-
6	NC	D.O	-	-	-
7	NC	D.O	-	-	-
8	NC	D.O	-	-	-
9	EP_SDA	D.O	High	-	Low
10	EP_SCL	D.O	High	-	Low
11	EP_WP	D.O	WP	-	Write
12	VCC	VCC	Vcc	-	-
13	GND	GND	-	-	GND
14	NC	D.O	-	-	-
15	BBIC_PWDN	D.O	Not	-	Active
16	RF_RESET	D.O	Normal	-	Reset
17	ATN_DVC	D.O	High	-	Low
18	KEYF	D.O	Active	Not	-
19	KEYE	D.O	Active	Not	-
20	KEYD	D.O	Active	Not	-
21	KEYC	D.O	Active	Not	-
22	KEYB	D.O	Active	Not	-
23	KEYA	D.O	Active	Not	-
24	USE_CTL (LBL2)	D.O	RLY Off	-	RLY On
25	SPI_DOUT	D.I	High	-	Low
26	SPI_EN	D.O	Not	-	Active
27	SPI_CLK	D.O	High	-	Low
28	GND	GND	-	-	GND
29	SPI_DIN	D.O	High	-	Low
30	NC	D.O	-	-	-
31	GNDPA	GND	-	-	GND
32	SPP	A.O	-	-	-
33	SPN	A.O	-	-	-
34	VCCPA	VCC	VCC	-	-
35	HSOUT	A.O	-	-	-
36	LOUT	A.O	-	-	-
37	VCCA	VCC	VCC	-	-
38	LIN	A.I	-	-	-
39	LGS	A.O	-	-	-
40	DCIN	A.I	-	-	-
41	CIDIN	A.I	-	-	-
42	CIDIP	A.I	-	-	-
43	CIDO	A.O	-	-	-
44	HMGS	A.O	-	-	-
45	HMIN	A.I	-	-	-
46	GNDA	GND	-	-	GND
47	HIN	A.I	-	-	-
48	HGS	A.O	-	-	-
49	VREF	A.O	-	-	-
50	GNDPLL	GND	-	-	GND

Pin	Description	I/O	High	Hi-z	Low
51	VCCPLL	VCC	VCC	-	-
52	VRTC	VCC	VCC	-	-
53	XOUT	A.O	-	-	-
54	XIN	A.I	-	-	-
55	GND	GND	-	-	GND
56	RSTN	D.I	Normal	-	Reset
57	PDN	D.I	Power On	-	Power Down
58	NC	D.O	-	-	-
59	IRQ_TXRX	D.I	Normal	-	Interrupt
60	CHG	D.I	Off charge	-	On Charge
61	NC	D.O	-	-	-
62	NC	D.O	-	-	-
63	NC	D.O	-	-	-
64	BELL	D.I	High	-	Low
65	(SOUT) INUSE_LED	D.O	Off	-	On
66	VML_LED	D.O	Off	-	On
67	C-ID_LED	D.O	Off	-	On
68	(HS_DET) F/F	D.I	F2PROM	-	FI ASH
69	ADPCM_BCLK	D.I	High	-	Low
70	ADPCM_SYNC	D.I	High	-	Low
71	ADPCM_OUT	D.I	High	-	Low
72	ADPCM_IN	D.O	High	-	Low
73	CHGCTL	D.O	-	Charge	Non Charge
74	GND	GND	-	-	GND
75	VCC	VCC	VCC	-	-
76	KEY5	D.I	Key In	-	Non
77	KEY6	D.I	Key In	-	Non
78	KEY1	D.I	Key In	-	Non
79	KEY2	D.I	Key In	-	Non
80	NC	D.I	-	-	-
81	NC	D.I	-	-	-
82	NC	D.O	-	-	-
83	NC	D.O	-	-	-
84	NC	D.O	-	-	-
85	NC	D.O	-	-	-
86	NC	D.O	-	-	-
87	NC	D.O	-	-	-
88	NC	D.O	-	-	-
89	NC	D.O	-	-	-
90	NC	D.O	-	-	-
91	NC	D.O	-	-	-
92	GND	GND	-	-	GND
93	VCC	VCC	VCC	-	-
94	NC	D.O	-	-	-
95	NC	D.O	-	-	-
96	UART_RX	D.I	High	-	Low
97	UART_TX	D.O	High	-	Low
98	NC	D.O	-	-	-
99	RLY (+USECTL)	D.O	On	-	Off
100	NC	D.O	Off	-	On

16. CPU DATA (Handset)

16.1. IC201

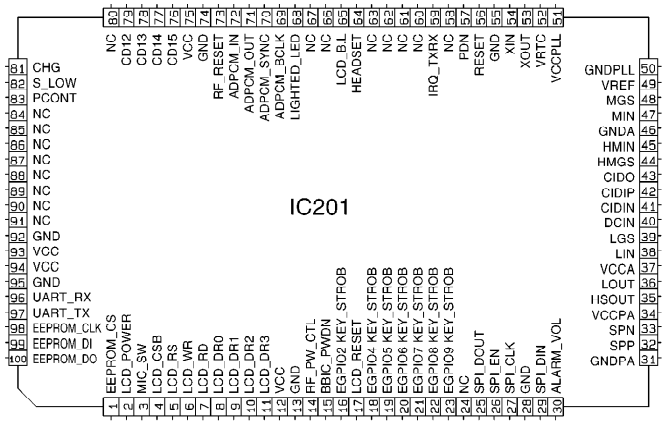

Pin	Description	I/O	High	Hi-z	Low
1	EEPROM_CS	D.O	Active	-	Not
2	LCD_POWER	D.O	Off	-	On
3	MIC_SW	D.O	Bias Off	-	Bias On
4	LCD_CSB	D.O	Not	-	Active
5	LCD_RS	D.O	Data	-	Instruct
6	LCD_WR	D.O	Read	-	Write
7	LCD_RD	D.O	Active	-	Not
8	LCD_DR0	D.O	High	-	Low
9	LCD_DR1	D.O	High	-	Low
10	LCD_DR2	D.O	High	-	Low
11	LCD_DR3	D.O	High	-	Low
12	VCC	VCC	Vcc	-	
13	GND	GND	-	-	GND
14	RF_PW_CTL	D.O	Off	-	On
15	BBIC_PWDN	D.O	Not	-	Active
16	EGPIO2 KEY_STROB	D.O	Active	Not	-
17	LCD_RESET	D.O	Not	-	Reset
18	EGPIO4 KEY_STROB	D.O	Active	Not	-
19	EGPIO5 KEY_STROB	D.O	Active	Not	-
20	EGPIO6 KEY_STROB	D.O	Active	Not	-
21	EGPIO7 KEY_STROB	D.O	Active	Not	-
22	EGPIO8 KEY_STROB	D.O	Active	Not	-
23	EGPIO9 KEY_STROB	D.O	Active	Not	-
24	NC	D.O	-	-	-
25	SPI_DOUT	D.I	High	-	Low
26	SPI_EN	D.O	Not	-	Active
27	SPI_CLK	D.O	High	-	Low
28	GND	-	-	-	GND
29	SPI_DIN	D.O	High	-	Low
30	ALARM_VOL	D.O	Off	-	On
31	GNDPA	GND	-	-	GND
32	SPP	A.O	-	-	-
33	SPN	A.O	-	-	-
34	VCCPA	VCC	VCC	-	-
35	HSOUT	A.O	-	-	-
36	LOUT	A.O	-	-	-
37	VCCA	VCC	VCC	-	-
38	LIN	A.I	-	-	-
39	LGS	A.O	-	-	-
40	DCIN	A.I	-	-	-
41	CIDIN	A.I	-	-	-
42	CIDIP	A.I	-	-	-
43	CIDO	A.O	-	-	-
44	HMGS	A.O	-	-	-
45	HMIN	A.I	-	-	-
46	GNDA	GND	-	-	GND
47	MIN	A.I	-	-	-
48	MGS	A.O	-	-	-
49	VREF	A.O	-	-	-
50	GNDPLL	GND	-	-	GND

Pin	Description	I/O	High	Hi-z	Low
51	VCCPLL	VCC	VCC	-	-
52	VRTC	VCC	VCC	-	-
53	XOUT	A.O	-	-	-
54	XIN	A.I	-	-	-
55	GND	GND	-	-	GND
56	RESET	D.I	Normal	-	Reset
57	PDN	D.I	Power On	-	Power Down
58	NC	D.O	-	-	Normal
59	IRQ_TXRX	D.I	Normal	-	Interrupt
60	NC	D.O	-	-	Normal
61	NC	D.O	-	-	Normal
62	NC	D.O	-	-	Normal
63	NC	D.O	-	-	Normal
64	HEADSET	D.I	Headset In	-	Non
65	LCD_B.L	D.O	On	-	Off
66	NC	D.O	-	-	Normal
67	NC	D.O	-	-	Normal
68	LIGHTED_LED	D.O	On	-	Off
69	ADPCM_BCLK	D.I	High	-	Low
70	ADPCM_SYNC	D.I	High	-	Low
71	ADPCM_OUT	D.I	High	-	Low
72	ADPCM_IN	D.O	High	-	Low
73	RF_RESET	D.O	Normal	-	Reset
74	GND	GND	-	-	GND
75	VCC	VCC	VCC	-	-
76	CD15	D.I	Key In	-	Non
77	CD14	D.I	Key In	-	Non
78	CD13	D.I	Key In	-	Non
79	CD12	D.I	Key In	-	Non
80	NC	D.O	-	-	Normal
81	CHG	D.I	Off Charge	-	On Charge
82	S_LOW	D.O	-	Pin 83 = H: High Power Pin 83 = L: -	P 82 = Hiz: Low Power P 82 = L: Super Low Power
83	PCONT	D.O	Pin 82 = Hiz: High Power Pin 82 = L: Super Low Power	-	Super Low Power
84	NC	D.O	-	-	Normal
85	NC	D.O	-	-	Normal
86	NC	D.O	-	-	Normal
87	NC	D.O	-	-	Normal
88	NC	D.O	-	-	Normal
89	NC	D.O	-	-	Normal
90	NC	D.O	-	-	Normal
91	NC	D.O	-	-	Normal
92	GND	GND	-	-	GND
93	VCC	VCC	VCC	-	-
94	VCC	VCC	VCC	-	-
95	GND	GND	-	-	GND
96	UART_RX	D.I	High	-	Low
97	UART_TX	D.O	High	-	Low
98	EEPROM_CLK	D.O	High	-	Low
99	EEPROM_DI	D.O	High	-	Low
100	EEPROM_DO	D.I	High	-	Low

17. EXPLANATION OF IC TERMINALS (RF Unit, Base Unit)

17.1. IC101

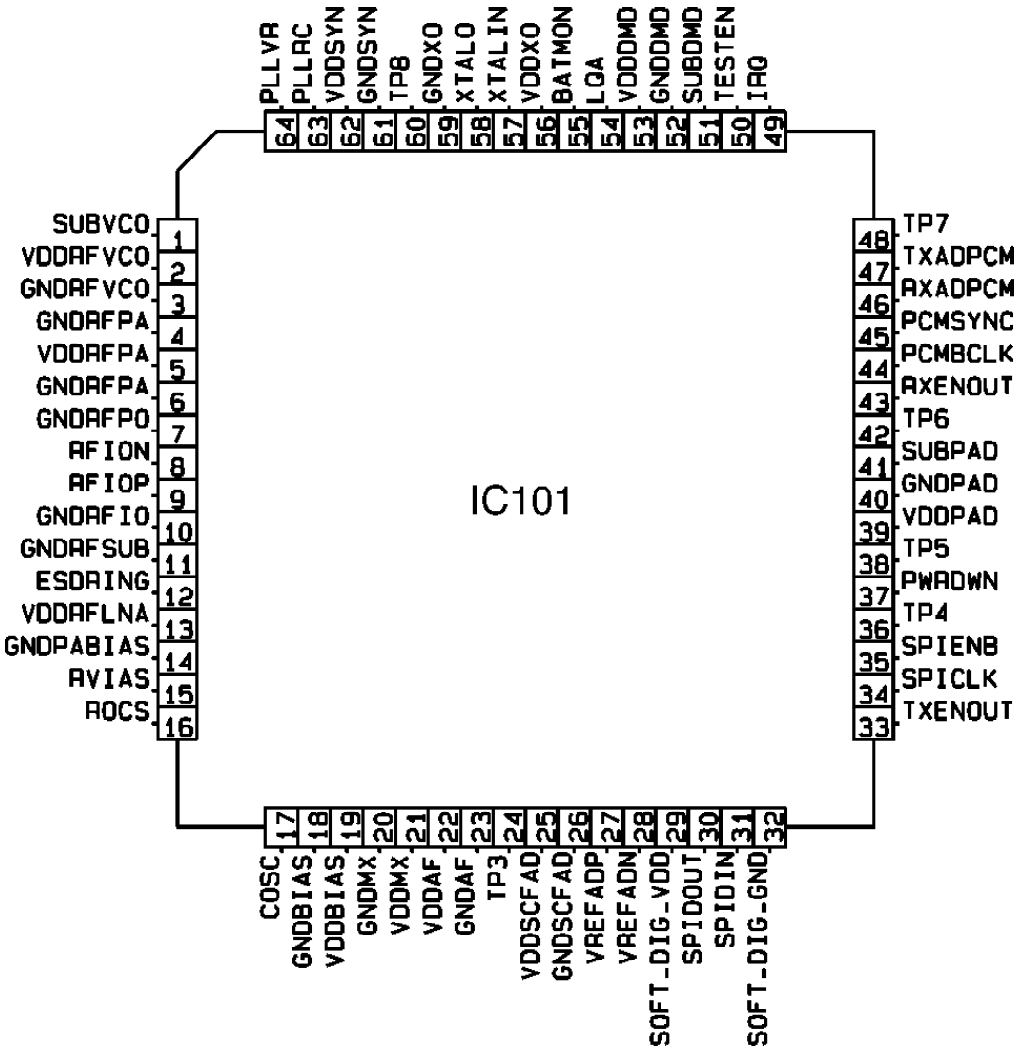
IC101
SUBVCO 1
VDDAFVCO 2
GNDAFVCO 3
GNDAFPA 4
VDDAFPA 5
GNDAFPA 6
GNDAFPO 7
AFION 8
AFIOP 9
GNDAFIO 10
GNDAFSUB 11
ESDRING 12
VDDAFLNA 13
GNDPABIAS 14
AVIAS 15
AOCS 16
COSC 17
GNDBIAS 18
VDDBIAS 19
GNDMX 20
VDDMX 21
VDDAF 22
GNDAF 23
TP3 24
VDDSCFAD 25
GNDSCFAD 26
VREFADP 27
VREFADN 28
SOFT_DIG_VDD 29
SPIDOUT 30
SPIDIN 31
SOFT_DIG_GND 32
TXENOUT 33
SPICLK 34
SPIENB 35
TP4 36
PWRDWN 37
TP5 38
VDDPAD 39
GNDPAD 40
SUBPAD 41
TP6 42
AXENOUT 43
PCMBCLK 44
PCMSYNC 45
AXADPCM 46
TXADPCM 47
TP7 48
IRQ 49
TESTEN 50
SUBDMD 51
GNDDMD 52
VDDDMD 53
LQA 54
BATMON 55
VDDXO 56
XTALIN 57
XTALO 58
GNDXO 59
TP8 60
GNDSYN 61
VDDSYN 62
PLLRC 63
PLLVR 64

Pin	Description	I/O
1	SUBVCO	GND
2	VDDRFVCO	VCC
3	GNDRFVCO	GND
4	GNDRFPA	GND
5	VDDRFPA	VCC
6	GNDRFPA	GND
7	GNDRFPO	GND
8	RF ION	I/O
9	RF IOP	I/O
10	GNDRFIO	GND
11	GNDRFSUB	GND
12	ESDRING	GND
13	VDDRFLNA	VCC
14	GNDPABIAS	GND
15	RBIAS	I
16	ROCS	I
17	COSC	I
18	GNDBIAS	GND
19	VDDBIAS	VCC
20	GNDMX	GND
21	VDDMX	VCC
22	VDDAF	VCC
23	GNDAF	GND
24	TP3	O
25	VDDSCFAD	VCC
26	GNDSCFAD	GND
27	VREFADP	VCC
28	VREFADN	I
29	SOFT_DIG_VDD	VCC
30	SPIDOUT	D.O
31	SPIDIN	D.I
32	SOFT_DIG_GND	GND

Pin	Description	I/O
33	TXENOUT	D.O
34	SPICLK	D.I
35	SPIENB	D.I
36	RESET	D.I
37	PWRDWN	D.I
38	MCLKOUT	O
39	VDDPAD	VCC
40	GNDPAD	GND
41	SUBPAD	GND
42	TP6	D.O
43	RXENOUT	D.O
44	PCMBCLK	D.O
45	PCMSYNC	D.O
46	RXADPCM	D.O
47	TXADPCM	D.I
48	TP7	D.O
49	IRQ	D.O
50	TESTEN	D.I
51	XUBDMD	GND
52	GNDDMD	GND
53	VDDDMD	VCC
54	LQA	D.O
55	BATMON	I
56	VDDXO	VDD
57	XTALIN	I
58	XTALO	O
59	GNDXO	GND
60	TP8	D.I
61	GNDSYN	GND
62	VDDSYN	VCC
63	PLLRC	O
64	PLLVR	I

18. HOW TO REPLACE FLAT PACKAGE IC

18.1. Preparation

- SOLDER

Sparkle Solder 115A-1, 115B-1 or Almit Solder KR-19, KR-19RMA

- Soldering iron

Recommended power consumption will be between 30 W to 40 W.
Temperature of Copper Rod 662 ± 50°F (350 ± 10°C)
(An expert may handle between 60 W to 80 W iron, but beginner might damage foil by overheating.)

- Flux

HI115 Specific gravity 0.863
(Original flux will be replaced daily.)

18.2. Procedure

1. Temporary fix FLAT PACKAGE IC by soldering on two marked 2 pins.

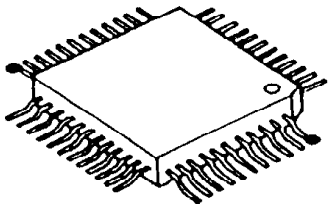

● – – – – – –Temporary soldering point.

***Most important matter is accurate setting of IC to the corresponding soldering foil.**

2. Apply flux for all pins of FLAT PACKAGE IC.

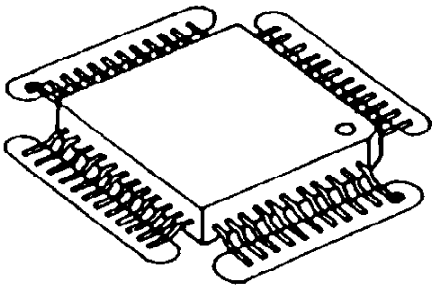

– – – – – – Flux

3. Solder employing specified solder to direction of arrow, as sliding the soldering iron.

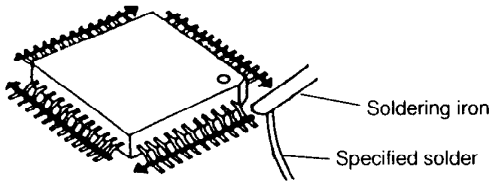

18.3. Modification Procedure of Bridge

1. **Re-solder slightly on bridged portion.**
2. **Remove remained solder along pins employing soldering iron as shown in below figure.**

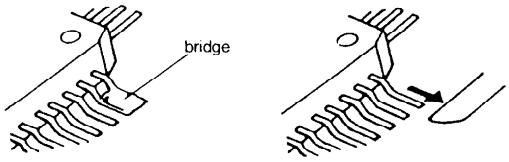

19. CABINET AND ELECTRICAL PARTS (Base Unit)

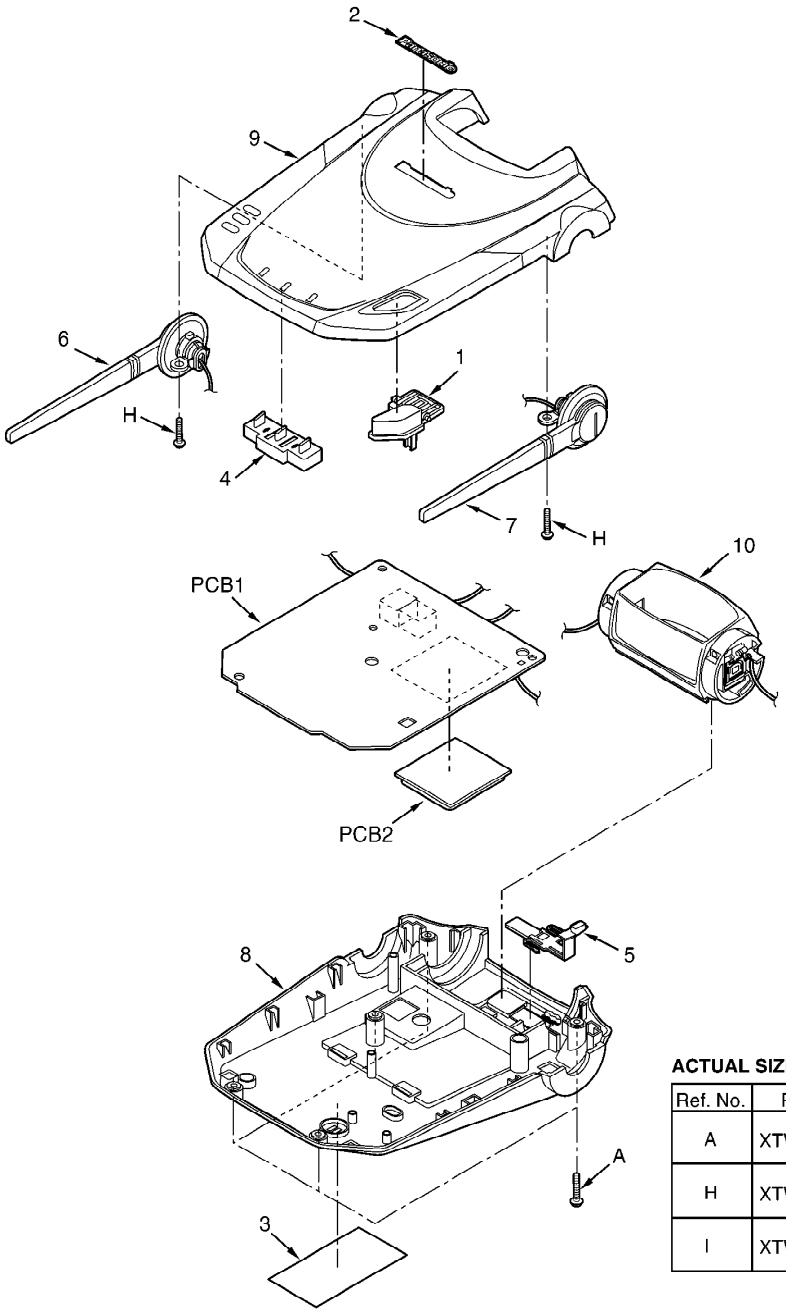

ACTUAL SIZE OF SCREWS

Ref. No.	Part No.	Screw
A	XTW26+14P	
H	XTW26+14P	
I	XTW26+8P	

20. CABINET AND ELECTRICAL PARTS (Handset)

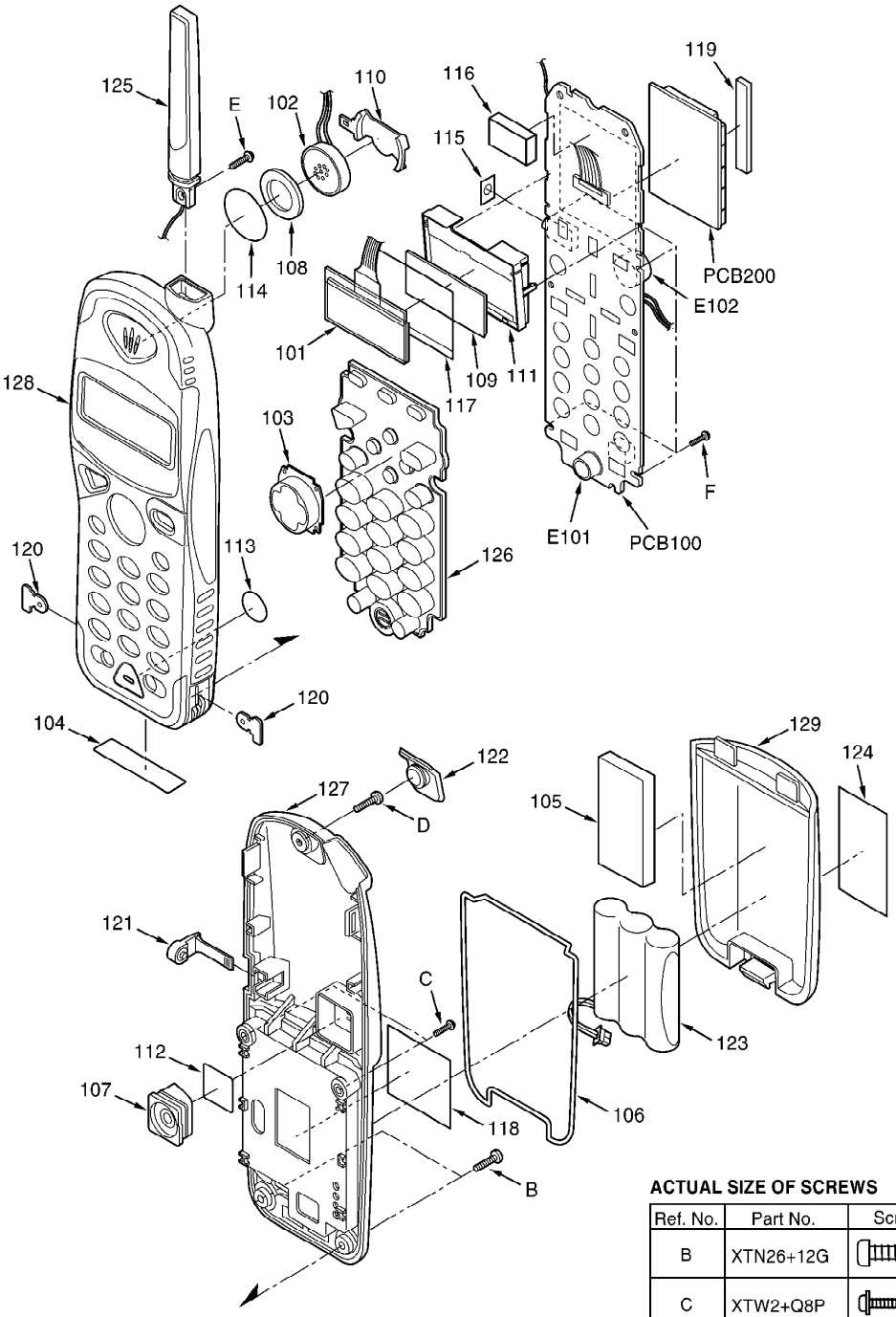

ACTUAL SIZE OF SCREWS

Ref. No.	Part No.	Screw
B	XTN26+12G	
C	XTW2+Q8P	
D	XTN26+12G	
E	XTW26+12P	
F	XTW2+Q8P	

21. ACCESSORIES AND PACKING MATERIALS

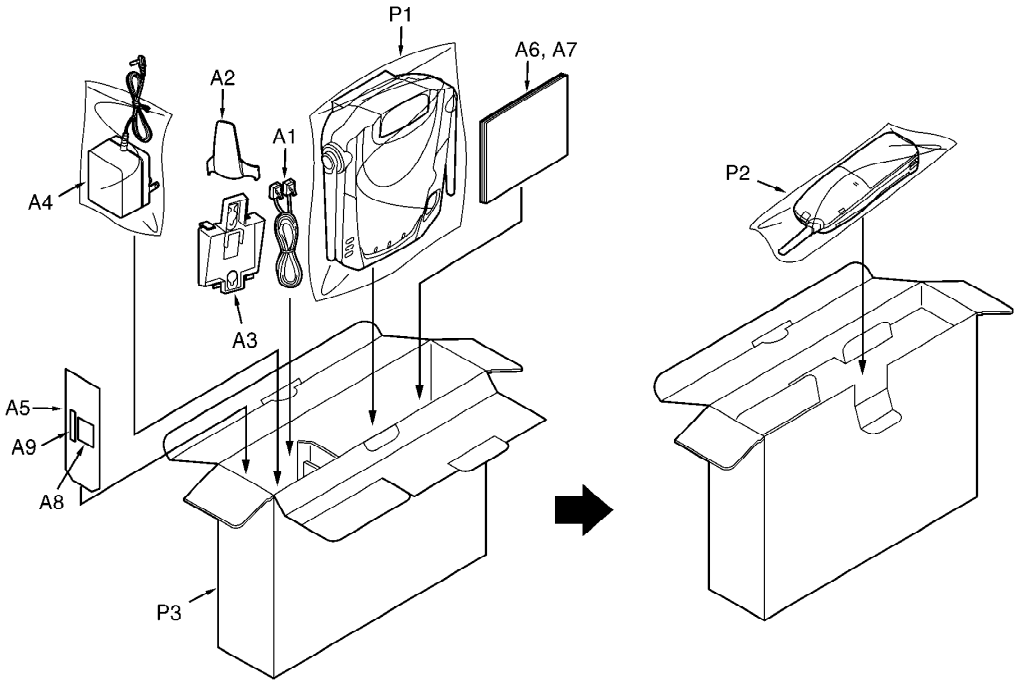

22. REPLACEMENT PARTS LIST

This replacement parts list are U.S.A. version only.
Note:

1. **RTL (Retention Time Limited)**
   The marking (RTL) indicates that the Retention Time is limited for this item.
   After the discontinuation of this assembly in production, the item will continue to be available for a specific period of time. The retention period of availability is dependent on the type of assembly, and in accordance with the laws governing part and product retention.
   After the end of this period, the assembly will no longer be available.
2. **Important safety notice**
   Components identified by a ⚠ mark special characteristics important for safety. When replacing any of these components, use only manufacture's specified parts.
3. **The S mark indicates service standard parts and may differ from production parts.**
4. **RESISTORS & CAPACITORS**
   Unless otherwise specified;

All resistors are in ohms (Ω) K=1000 Ω , M=1000k Ω
All capacitors are in MICRO FARADS (μ F) P= μ μ F
***Type & Wattage of Resistor**

Type

ERC:Solid ERD:Carbon PQRD:Carbon	ERX:Metal Film ERG:Metal Oxide ER0:Metal Film	PQ4R:Carbon ERS:Fusible Resistor ERF:Cement Resistor

Wattege

10,16:1/8W	14,25:1/4W	12:1/2W	1:1W	2:2W	3:3W

*Type & Voltage of Capacitor
Type

ECFD:Semi-Conductor ECQS:Styrol PQCUV:Chip ECQMS:Mica	ECCD,ECKD,ECBT,PQCBC:Ceramic ECQE,ECQV,ECQG:Polyester ECEA,ECSZ:Electlytic ECQP:Polypropylene

Voltage

ECQ Type	ECQG ECQV Type	ECSZ Type	Others	
1H:50V 2A:100V 2E:250V 2H:500V	05:50V 1:100V 2:200V	0F:3.15V 1A:10V 1V:35V 0J:6.3V	0J :6.3V 1A :10V 1C :16V 1E,25:25V	1V :35V 50,1H:50V 1J :63V 2A :100V

22.1. Base Unit

22.1.1. CABINET AND ELECTRICAL PARTS

Ref. No.	Part No.	Part Name & Description	Remarks
1	PQBC10333Z1	LOCATOR BUTTON	S
2	PQGB7Y	BADGE	
3	PQGT14580Z	NAME PLATE (for KX-TG2553B)	
3	PQGT14505Z	NAME PLATE (for KX-TG2553S)	
3	PQGT14678Z	NAME PLATE (for KX-TG2553F)	
4	PQHR10845Z	LED LENS	
5	PQKE10333Z1	HOOK LEVER	S
6	PQSA10109Y	ANTENNA	
7	PQSA10110Y	ANTENNA	
8	PQYF10195Y1	LOWER CABINET	S
9	PQYM10111Z1	UPPER CABINET (for KX-TG2553B)	S
9	PQYM10111Z2	UPPER CABINET (for KX-TG2553S)	S
9	PQYM10111Z3	UPPER CABINET (for KX-TG2553F)	S
10	PQZHTG2583BH	CHARGE TERMINAL ASS'Y	

22.1.2. MAIN P.C. BOARD PARTS

Ref. No.	Part No.	Part Name & Description	Remarks
PCB1	PQWPTG2553BH	MAIN P.C. BOARD ASS'Y (RTL)	
		(ICS)	
IC301	PQVIXCF4502P	IC	S
IC331	PQVIPS3432UT	IC	S
IC501	C2HBBH000018	IC	
IC551	PQWITG2553BH	IC	
IC741	PQVITC7S08FU	IC	S
IC751	PQVITC7W74U	IC	S
IC761	PQVISPM3204T	IC	S
		(TRANSISTORS)	
Q101	2SD1819A	TRANSISTOR(SI)	
Q115	2SD1819A	TRANSISTOR(SI)	
Q121	2SA1625	TRANSISTOR(SI)	S
Q122	PQVT2N6517CA	TRANSISTOR(SI)	S
Q131	2SC2120	TRANSISTOR(SI)	S
Q311	2SD2136	TRANSISTOR(SI)	
Q321	2SD1819A	TRANSISTOR(SI)	
Q341	2SD1819A	TRANSISTOR(SI)	
Q342	2SD1819A	TRANSISTOR(SI)	
Q343	2SD1819A	TRANSISTOR(SI)	
Q371	2SD2136	TRANSISTOR(SI)	
Q381	2SD1819A	TRANSISTOR(SI)	
Q445	2SD1819A	TRANSISTOR(SI)	
Q451	PQVTDTC123JU	TRANSISTOR(SI)	S
Q461	2SD1819A	TRANSISTOR(SI)	
Q551	2SD1819A	TRANSISTOR(SI)	
Q601	2SD1994A	TRANSISTOR(SI)	
Q611	2SD1994A	TRANSISTOR(SI)	
Q621	2SD2137	TRANSISTOR(SI)	
		(DIODES)	
D101	PQVDS1ZB60F1	DIODE(SI)	S
D103	MA111	DIODE(SI)	
D117	MA111	DIODE(SI)	
D118	MA111	DIODE(SI)	
D121	PQVDRLZ20A	DIODE(SI)	S
D131	PQVDRLZ2R0	DIODE(SI)	S
D311	MA8075	DIODE(SI)	
D321	MA111	DIODE(SI)	
D331	MA8036H	DIODE(SI)	
D371	MA111	DIODE(SI)	
D376	MA8220	DIODE(SI)	
D377	MA8220	DIODE(SI)	
D445	MA153	DIODE(SI)	
D509	PQVDHRU0203A	DIODE(SI)	S
D515	MA111	DIODE(SI)	
D519	MA111	DIODE(SI)	
D521	PQVDHRU0203A	DIODE(SI)	S
D611	MA8043	DIODE(SI)	
D621	MA8082	DIODE(SI)	
D741	MA111	DIODE(SI)	
D751	MA111	DIODE(SI)	
		(LEDS)	
LED541	LNJ308G8JRA	LED	S
LED542	PQVDEL1921SR	LED	S

Ref. No.	Part No.	Part Name & Description	Remarks
LED543	PQVDEL1921SR	LED	S
		(COILS)	
L101	PQLQXF330K	COIL	S
L102	PQLQXF330K	COIL	S
L501	PFVF2P221SG	COIL	
L515	PQLQR2K1A102	COIL	
		(CONNECTOR)	
CN101	PQJJ2H003Z	DC-TEL	S
		(CRYSTAL OSCILLATOR)	
X501	PQVCK4096N9Z	CRYSTAL OSCILLATOR	S
		(SURGE ABSORBERS)	
SA101	PQVDDSS301L	SURGE ABSORBER	
SA102	PQVDDSS301L	SURGE ABSORBER	
		(OTHERS)	
G601	PQJT10152Z	CHARGE TERMINAL	
G602	PQJT10152Z	CHARGE TERMINAL	
G603	PQJT10152Z	CHARGE TERMINAL	
G604	PQJT10152Z	CHARGE TERMINAL	
G605	PQJT10152Z	CHARGE TERMINAL	
G606	PQJT10152Z	CHARGE TERMINAL	
P101	PQRPAR390N	POSISTOR	S
S546	EVQPC005K	PUSH SWITCH	
		(RESISTORS)	
R103	ERJ3GEYJ104	100k	
R104	ERJ3GEYJ104	100k	
R106	ERJ3GEYJ472	4.7k	
R107	ERJ3GEYJ473	47k	
R111	ERJ3GEYJ394	390k	
R112	ERJ3GEYJ394	390k	
R113	ERJ3GEYJ472	4.7k	
R115	ERJ3GEYJ125	1.2M	
R116	ERDS1VJ106	10M	
R117	ERJ3GEYJ335	3.3M	
R118	ERJ3GEYJ102	1k	
R121	ERJ3GEYJ104	100k	
R122	ERJ3GEYJ103	10k	
R123	ERJ3GEYJ153	15k	
R124	ERJ3GEYJ473	47k	
R128	ERJ3GEYJ103	10k	
R132	ERJ3GEYJ393	39k	
R133	ERJ3GEYJ102	1k	
R134	ERJ3GEY0R00	0	
R136	ERDS1TJ330	33	S
R138	ERJ3GEYJ470	47	
R139	ERJ3GEYJ122	1.2k	
R140	ERJ3GEYJ821	820	
R311	ERD25TJ221	220	S
R331	ERJ3GEYJ273	27k	
R332	ERJ3GEYJ683	68k	
R333	ERJ3GEYJ103	10k	
R335	ERJ3GEYJ561	560	
R336	ERJ3GEYJ563	56k	
R341	ERJ3GEYJ473	47k	
R342	ERJ3GEYJ224	220k	

Ref. No.	Part No.	Part Name & Description	Remarks
R344	ERJ3GEYJ104	100k	
R345	ERJ3GEYJ224	220k	
R371	ERJ3GEYJ121	120	
R372	ERJ3GEYJ561	560	
R373	ERJ3GEYJ390	39	
R374	ERJ3GEYJ220	22	
R375	ERJ3GEYJ220	22	
R376	ERJ3GEYJ220	22	
R377	ERDS1TJ221	220	S
R378	ERDS1TJ221	220	S
R381	ERJ3GEYJ563	56k	
R382	ERJ3GEYJ563	56k	
R383	ERJ3GEYJ103	10k	
R384	ERJ3GEYJ104	100k	
R411	ERJ3GEYJ394	390k	
R412	ERJ3GEYJ394	390k	
R413	ERJ3GEYJ103	10k	
R414	ERJ3GEYJ103	10k	
R415	ERJ3GEYJ473	47k	
R431	ERJ3GEYJ222	2.2k	
R433	ERJ3GEYJ393	39k	
R442	ERJ3GEYJ682	6.8k	
R443	ERJ3GEYJ103	10k	
R444	ERJ3GEYJ332	3.3k	
R445	ERJ3GEYJ564	560k	
R446	ERJ3GEYJ105	1M	
R447	ERJ3GEYJ151	150	
R448	ERJ3GEYJ222	2.2k	
R449	ERJ3GEYJ102	1k	
R451	ERJ3GEYJ103	10k	
R461	ERJ3GEYJ150	15	
R462	ERJ3GEYJ392	3.9k	
R464	ERJ3GEYJ474	470k	
R465	ERJ3GEYJ390	39	
R516	ERJ3GEY0R00	0	
R521	ERJ3GEY0R00	0	
R541	ERJ3GEYJ151	150	
R542	ERJ3GEYJ331	330	
R543	ERJ3GEYJ471	470	
R546	ERJ3GEYJ472	4.7k	
R551	ERJ3GEYJ274	270k	
R553	ERJ3GEYJ103	10k	
R554	ERJ3GEYJ103	10k	
R559	ERJ3GEYJ104	100k	
R593	ERJ3GEYJ472	4.7k	
R611	ERJ3GEYJ221	220	
R621	ERJ3GEYJ471	470	
R658	ERJ3GEYJ180	18	
R659	ERJ3GEYJ221	220	
R660	ERJ3GEYJ821	820	
R664	ERJ3GEYJ180	18	
R666	ERJ3GEYJ180	18	
R751	ERJ3GEYJ103	10k	
R753	ERJ3GEYJ104	100k	

Ref. No.	Part No.	Part Name & Description	Remarks
R754	ERJ3GEYJ104	100k	
		(CAPACITORS)	
C101	ECKD2H681KB	680P	S
C102	ECKD2H681KB	680P	S
C103	PQCUV1H154KR	0.15	
C104	PQCUV1H154KR	0.15	
C106	PQCUV1A684KB	0.68	
C111	ECKD2H681KB	680P	S
C112	ECKD2H681KB	680P	S
C115	ECUV1H103KBV	0.01	
C121	ECUV1H103KBV	0.01	
C131	ECUV1H101JCV	100P	
C132	ECUV1H103KBV	0.01	
C134	ECEA1HKS100	10	S
C139	ECEA1CKA100	10	
C140	ECUV1C473KBV	0.047	
C301	ECUV1H103KBV	0.01	
C302	ECUV1C104ZFV	0.1	
C303	ECUV1C104ZFV	0.1	
C304	ECEA1CKA100	10	
C306	ECEA1AU221	220	
C308	ECUV1H103KBV	0.01	
C311	ECEA1CKA100	10	
C333	ECUV1H103KBV	0.01	
C341	ECUV1H102KBV	0.001	
C342	ECUV1H102KBV	0.001	
C344	ECUV1C104ZFV	0.1	
C345	ECUV1C104KBV	0.1	
C371	ECUV1C104ZFV	0.1	
C373	ECUV1H103KBV	0.01	
C383	ECUV1H103KBV	0.01	
C411	ECUV1H121JCV	120P	
C412	ECUV1A105ZFV	1	
C413	ECUV1H121JCV	120P	
C414	ECEA1CKA100	10	
C415	ECUV1A105ZFV	1	
C431	ECUV1H272KBV	0.0027	
C432	ECUV1C104KBV	0.1	
C440	ECUV1H100DCV	10P	S
C441	ECUV1A224KBV	0.22	
C442	ECUV1C683KBV	0.068	
C443	ECUV1H101JCV	100P	
C444	ECUV1C104KBV	0.1	
C445	ECEA1CKA100	10	
C448	ECUV1C473KBV	0.047	
C449	ECUV1C104KBV	0.1	
C451	ECUV1C473KBV	0.047	
C453	ECUV1H070CCV	7P	
C461	ECUV1C104ZFV	0.1	
C464	ECUV1H101JCV	100P	
C467	ECUV1H070CCV	7P	
C501	ECEA0JU102	1000	
C502	ECUV1C104ZFV	0.1	
C503	ECUV1C104ZFV	0.1	

Ref. No.	Part No.	Part Name & Description	Remarks
C504	ECUV1C104ZFV	0.1	
C505	ECUV1C104ZFV	0.1	
C506	ECUV1H080CCV	8P	
C507	ECUV1H050CCV	5P	
C508	ECUV1H332KBV	0.0033	
C511	ECUV1H152KBV	0.0015	
C513	ECUV1C104ZFV	0.1	
C515	ECEA1CKS220	22	S
C516	ECUV1C104ZFV	0.1	
C521	ECEA1AU101	100	S
C522	ECUV1C104ZFV	0.1	
C525	ECUV1C104ZFV	0.1	
C526	ECUV1H332KBV	0.0033	
C551	ECUV1C104ZFV	0.1	
C601	ECEA1AU101	100	S
C603	ECUV1C104ZFV	0.1	
C611	ECEA1AU101	100	S
C613	ECEA1AU101	100	S
C614	ECUV1C104ZFV	0.1	
C621	ECEA1EU101	100	S
C631	ECUV1H103KBV	0.01	
C654	ECUV1C104ZFV	0.1	
C657	ECUV1H680JCV	68P	
C663	ECUV1H680JCV	68P	
C665	ECUV1H680JCV	68P	
C741	ECUV1C104ZFV	0.1	
C751	ECUV1H100DCV	10P	S
C752	ECUV1H100DCV	10P	S
C753	ECUV1C104ZFV	0.1	
C760	ECUV1H070CCV	7P	
C761	ECUV1H070CCV	7P	
C763	ECUV1H070CCV	7P	
C764	ECUV1H070CCV	7P	

22.1.3. RF P.C. BOARD PARTS

Ref. No.	Part No.	Part Name & Description	Remarks
PCB2	PQLP10243Z	RF BLOCK	

22.2. Handset

22.2.1. CABINET AND ELECTRICAL PARTS

Ref. No.	Part No.	Part Name & Description	Remarks
101	PQADGP0831GN	LIQUID CRYSTAL DISPLAY	S
102	PQAX2P07Z	SPEAKER	
103	PQBC10335Z1	NAVI KEY BUTTON (for KX-TG2553B, KX-TG2553S)	S
103	PQBC10335Z2	NAVI KEY BUTTON (FOR KX-TG2553F)	
104	PQGT14581Z	NAME PLATE (for KX-TG2553B)	
104	PQGT14509Z	NAME PLATE (for KX-TG2553S)	
104	PQGT14679Z	NAME PLATE (for KX-TG2553F)	
105	PQHE10119Z	CUSHION, URETHANE FORM	
106	PQHG10620Z	PACKING RUBBER, BATTERY	
107	PQHG10621Z	RINGER RUBBER	
108	PQHG10630Z	PACKING RUBBER	
109	PQHR10727Z	LCD PLATE	
110	PQHR10739Z	SPEAKER HOLDER	
111	PQHR10850Z	LCD HOLDER	
112	PQHS10384Z	PACKING SHEET, RINGER	
113	PQHS10386Z	PACKING SHEET, MIC	
114	PQHS10461Z	PACKING SHEET, SPEAKER	
115	PQHS10484Z	PACKING SHEET, EARPHONE CAP	
116	PQHS10485Z	CUSHION, SPEAKER	
117	PQHX10862Z	LCD COVER SHEET	
118	PQHX10934Z	SHEET	
119	PQHX10959Z	RF SPONGE	
120	PQJT10175Z	CHARGE TERMINAL	
121	PQKE10128Z1	EARPHONE CAP	S
122	PQKE10129Z1	COVER	S
123	PQP508SVC	BATTERY	S
124	PQQT22212Z	CHARGE LABEL	
125	PQSA10120Z	ANTENNA	
126	PQSX10171Z	RUBBER SWITCH	
127	PQKF10514Z1	REAR CABINET(for KX-TG2553B)	S
127	PQKF10514Z2	REAR CABINET(for KX-TG2553S)	S
127	PQKF10514Z3	REAR CABINET(for KX-TG2553F)	S
128	PQYMTG2553BR	FRONT CABINET ASS'Y (for KX-TG2553B)	
128	PQYMTG2553SR	FRONT CABINET ASS'Y (for KX-TG2553S)	
128	PQYMTG2553FR	FRONT CABINET ASS'Y (for KX-TG2553F)	
129	PQKK10117Z1	BATTERY COVER (for KX-TG2553B)	
129	PQKK10117Z2	BATTERY COVER (for KX-TG2553S)	
129	PQKK10117Z3	BATTERY COVER (for KX-TG2553F)	

22.2.2. MAIN P.C. BOARD PARTS

Ref. No.	Part No.	Part Name & Description	Remarks
PCB100	PQWPTG2553BR	MAIN P.C. BOARD ASS'Y (RTL)	
		(ICS)	
IC201	C2HBBH000015	IC	
IC202	PQWITG2553BR	IC	
IC203	PQVIC62FP33M	IC	S
IC204	PQVIXCP3302M	IC	S
IC205	PQVIC61CN32N	IC	S
		(TRANSISTORS)	
Q201	PQVTDTC143E	TRANSISTOR(SI)	S
Q202	PQVTDTC143E	TRANSISTOR(SI)	S
Q203	PQVTDTA143TU	TRANSISTOR(SI)	
Q204	2SA1797Q	TRANSISTOR(SI)	S
Q205	2SD1819A	TRANSISTOR(SI)	
Q206	PQVTDTC143E	TRANSISTOR(SI)	S
Q207	2SD1819A	TRANSISTOR(SI)	
Q208	PQVTD123T146	TRANSISTOR(SI)	S
Q209	PQVTD123T146	TRANSISTOR(SI)	S
Q210	UN521	TRANSISTOR(SI)	
Q211	PQVTDTA143TU	TRANSISTOR(SI)	
		(DIODES)	
D203	MA111	DIODE(SI)	
D212	MA8150	DIODE(SI)	
D213	MA8150	DIODE(SI)	
D214	PQVD1SR154	DIODE(SI)	S
D215	MA2ZD1400	DIODE(SI)	
D216	PQVD1SR154	DIODE(SI)	S
		(LEDS)	
LED201	PQVDSML310MT	LED	S
LED202	PQVDSML310MT	LED	S
LED203	PQVDSML310MT	LED	S
LED204	PQVDSML310MT	LED	S
LED205	PQVDSML310MT	LED	S
LED206	PQVDSML310MT	LED	S
LED207	PQVDSML310MT	LED	S
		(COILS)	
L204	PQLQR3FL121	COIL	S
L205	PQLQR3FL121	COIL	S
		(CONNECTORS)	
CN201	PQJS22B11Z	CONNECTOR	
CN202	PQJP2D13Z	FPC CONNECTOR	S
CN203	PQJJ1J007Z	EAR JACK	S
		(CRYSTAL OSCILLATOR)	
X201	PQVCI4096N3Z	CRYSTAL OSCILLATOR	
		(OTHERS)	
E101	PQJM146Y	MICROPHONE	
E102	PQEFBC12111B	RINGER	S
G1	PQJT10152Z	CHARGE TERMINAL	
G2	PQJT10152Z	CHARGE TERMINAL	
G3	PQJT10152Z	CHARGE TERMINAL	
G4	PQJT10152Z	CHARGE TERMINAL	
G5	PQJT10152Z	CHARGE TERMINAL	
G6	PQJT10152Z	CHARGE TERMINAL	
		(RESISTORS)	
R201	ERJ3GEYJ331	330	

Ref. No.	Part No.	Part Name & Description	Remarks
R202	ERJ3GEYJ331	330	
R203	ERJ3GEYJ331	330	
R204	ERJ3GEYJ331	330	
R205	ERJ3GEYJ101	100	
R206	ERJ3GEYJ101	100	
R207	ERJ3GEYJ101	100	
R209	ERJ3GEYJ102	1k	
R210	ERJ3GEYJ104	100k	
R211	ERJ3GEYJ104	100k	
R212	ERJ3GEYJ101	100	
R213	ERJ3GEYJ101	100	
R217	ERJ3EKF4533	453k	
R218	ERJ3GEYF824	820k	S
R220	ERJ3GEYJ474	470k	
R221	ERJ3GEYJ103	10k	
R222	ERJ3GEYJ101	100	
R223	ERJ3GEY0R00	0	
R224	ERJ3GEYJ103	10k	
R225	ERJ3GEYJ472	4.7k	
R226	ERJ3GEYJ103	10k	
R227	ERJ3GEYJ473	47k	
R228	ERJ3GEYJ224	220k	
R229	ERJ3GEYJ102	1k	
R230	ERJ3GEYJ102	1k	
R231	ERJ3GEYJ102	1k	
R232	ERJ3GEYJ103	10k	
R233	ERJ3GEY0R00	0	
R234	ERJ3EKF2204	2.2M	
R235	ERJ3EKF2204	2.2M	
R236	ERJ3GEYJ473	47k	
R241	ERJ3GEY0R00	0	
R242	ERJ3GEYJ180	18	
R243	ERJ3GEYJ180	18	
R244	ERJ3GEYJ473	47k	
R245	ERJ3GEYJ103	10k	
R246	ERJ3GEYJ153	15k	
R247	ERJ3GEYJ391	390	
R248	ERJ3GEYJ393	39k	
R249	ERJ3GEYJ222	2.2k	
R250	ERJ3GEYJ222	2.2k	
R251	ERJ3GEYJ120	12	
R252	ERJ3GEYJ820	82	
R253	ERJ3GEYJ222	2.2k	
R260	ERJ3GEYJ103	10k	
R263	ERJ3GEYJ104	100k	
R264	ERJ3GEYJ103	10k	
R265	ERJ3GEYJ103	10k	
R266	ERJ3GEYJ105	1M	
R270	ERJ3GEYJ104	100k	
R271	ERJ3GEY0R00	0	
R272	ERJ3GEYJ105	1M	
R273	ERJ3GEY0R00	0	
R274	ERJ3GEY0R00	0	
R275	ERJ3GEY0R00	0	

Ref. No.	Part No.	Part Name & Description	Remarks
		(CAPACITORS)	
C203	ECUV1C104ZFV	0.1	
C205	ECUV1H101JCV	100P	
C206	ECUV1C104KBV	0.1	
C207	ECUV1C104KBV	0.1	
C208	ECUV1C104KBV	0.1	
C209	ECUV1C104KBV	0.1	
C210	ECUV1C104KBV	0.1	
C211	ECUV1A474KBV	0.47	
C212	ECUV1A474KBV	0.47	
C213	ECEV1AA221	220	
C214	ECUV1H103KBV	0.01	
C215	ECUV1A474KBV	0.47	
C217	ECUV1C104ZFV	0.1	
C218	ECUV1C104ZFV	0.1	
C219	ECUV1H470JCV	47P	
C220	ECEV0JA101	100	
C221	ECUV1C104ZFV	0.1	
C222	ECUV1C104ZFV	0.1	
C223	ECST0JY106	10	
C224	ECUV1C104ZFV	0.1	
C226	ECUV1C104ZFV	0.1	
C227	ECUV1H470JCV	47P	
C228	ECUV1C104ZFV	0.1	
C229	ECUV1C104ZFV	0.1	
C230	ECUV1C104KBV	0.1	
C231	ECUV1A224KBV	0.22	
C232	ECUV1C104KBV	0.1	
C233	ECUV1C104ZFV	0.1	
C234	ECUV1A224KBV	0.22	
C236	ECUV1H060DCV	6P	S
C237	ECUV1H060DCV	6P	S
C239	ECUV1H103KBV	0.01	
C249	ECST0GY226	22	
C255	ECUV1A224KBV	0.22	
C267	ECST0JY226	22	
C270	ECST0JY475	4.7	
C274	ECUV1C104ZFV	0.1	
C280	ECUV1C104ZFV	0.1	
C283	ECUV1A105ZFV	1	
C290	ECUV1H102KBV	0.001	
C291	ECUV1H102KBV	0.001	
C294	ECUV1H103KBV	0.01	
C296	ECUV1C104ZFV	0.1	
C297	ECUV1C104ZFV	0.1	
C298	ECUV1A105ZFV	1	

22.2.3. RF P.C. BOARD PARTS

Ref. No.	Part No.	Part Name & Description	Remarks
PCB200	PQLP10244Z	RF BLOCK	

22.3. ACCESSORIES AND PACKING MATERIALS

Ref. No.	Part No.	Part Name & Description	Remarks
A1	PQJA10075Z	TEL CORD	
A2	PQKE10127Z1	BELT CLIP	S
A3	PQKL10038Y3	WALL MOUNT ADAPTOR	S
A4	PQLV1Z	AC ADAPTOR	⚠
A5	PQPD10469Z	CUSHION CORRUGATED (for KXTG2553S)	
A6	PQQW12365Z	QUICK GUIDE (for English)	
A6	PQQW12366Z	QUICK GUIDE (for Spanish)	
A7	PQQX12977Z	INSTRUCTION BOOK	
A8	PQXDDS400-8	SECURITY TAG (for KX-TG2553S)	
A9	PQXDZLDRS1	SECURITY TAG (for KX-TG2553S)	
P1	XZB21X35A03	PROTECTION COVER (for Base unit)	
P2	XZB10X35A02	PROTECTION COVER (for Handset)	
P3	PQPK13346Z	GIFT BOX (for KXTG2553S)	
P3	PQPK13358Z	GIFT BOX (for KXTG2553B)	
P3	PQPK13415Z	GIFT BOX (for KXTG2553F)	

23. FOR SCHEMATIC DIAGRAM

23.1. Base Unit (SCHEMATIC DIAGRAM (Base Unit))

Notes:

1. DC voltage measurements are taken with voltmeter from the negative voltage line.

> Important Safety Notice:
> Components identified by ⚠ mark have special characteristics important for safety. When replacing any of these components, use only the manufacturer's specified parts.

This schematic diagram may be modified at any time with the development of new technology.

23.2. Handset (SCHEMATIC DIAGRAM (Handset))

Notes:

1. DC voltage measurements are taken with an oscilloscope or a tester with a ground.

2. The schematic diagrams and circuit board may be modified at any time with the development of new technology.

24. CIRCUIT BOARD (RF Unit)

24.1. RF Unit Reference Drawing (Base Unit and Handset)
25. SCHMATIC DIAGRAM (RF UNIT)
25.1. Base Unit and Handset
26. CIRCUIT BOARD (Base Unit)
26.1. Component View
26.2. Flow Solder Side View
27. SCHEMATIC DIAGRAM (Base Unit)
28. CIRCUIT BOARD (Handset)
28.1. Component View
28.2. Flow Solder Side View
29. SCHEMATIC DIAGRAM (Handset)

M / KXTG2553B / KXTG2553F / KXTG2553S / Printed in Japan

Block Diagram (Handset Power)

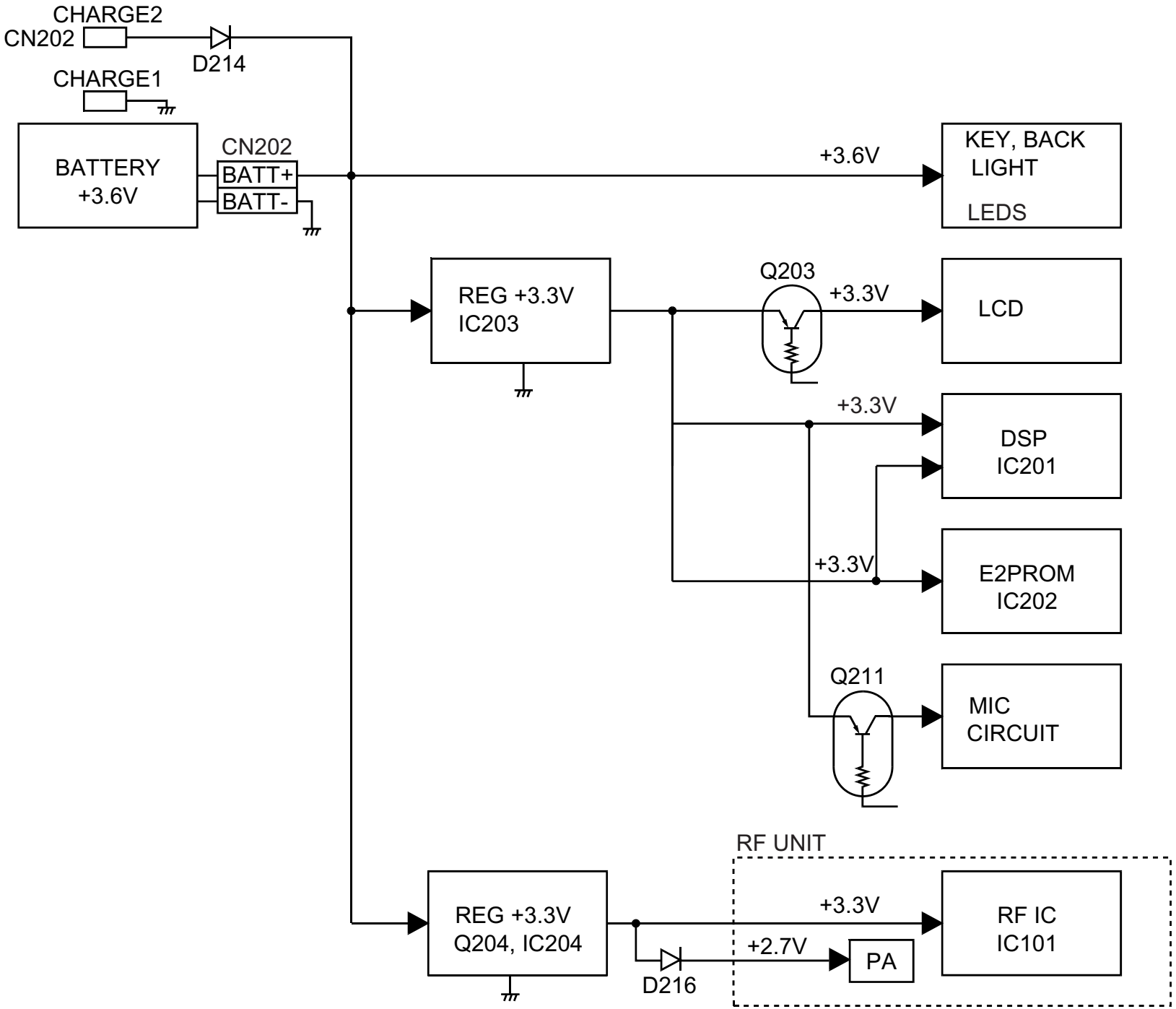

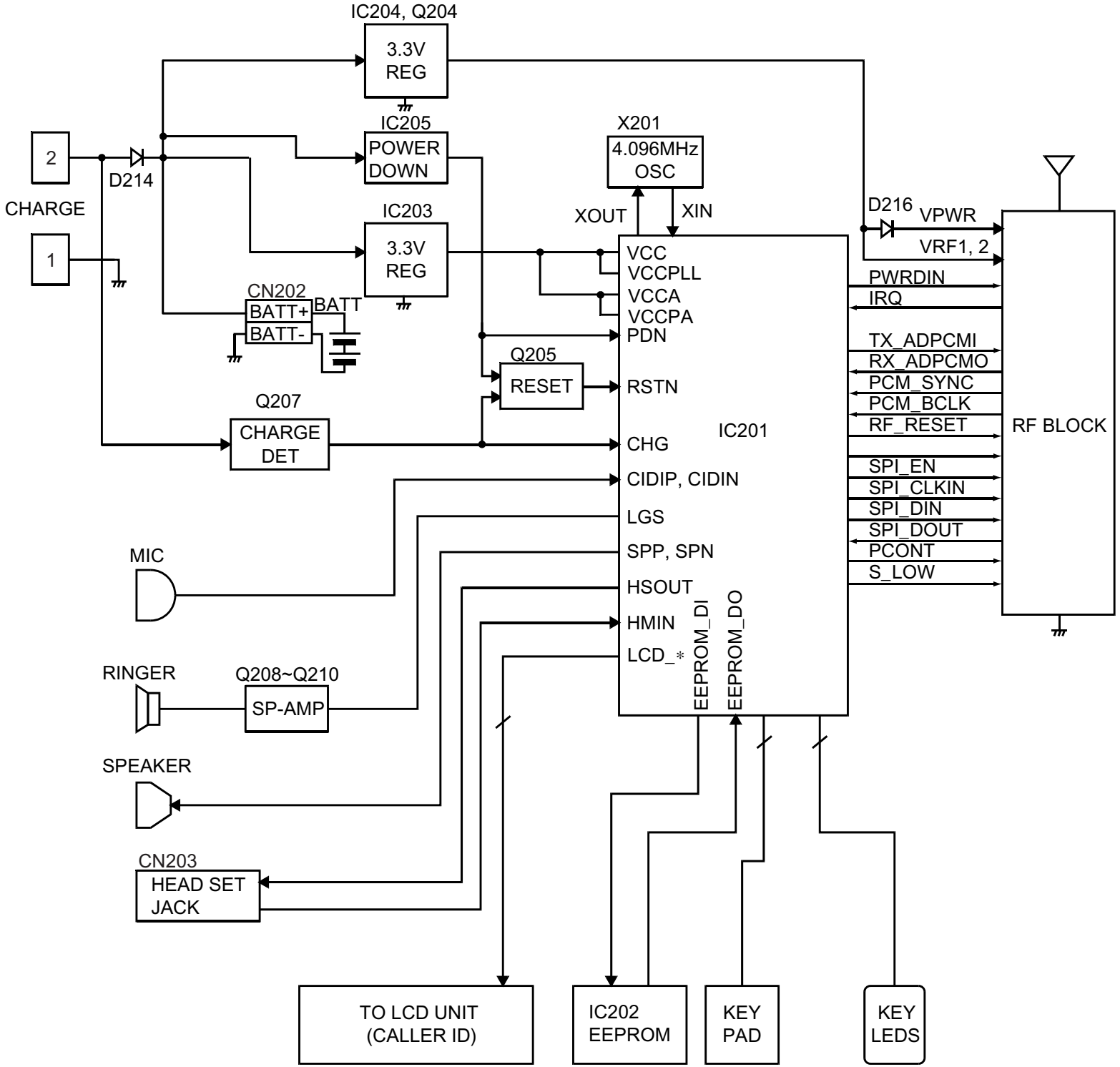
IC204, Q204
3.3V REG
IC205
POWER DOWN
X201
4.096MHz OSC
2
CHARGE
1
D214
IC203
3.3V REG
XOUT
XIN
D216
VPWR
VRF1, 2
CN202
BATT+
BATT-
BATT
VCC
VCCPLL
VCCA
VCCPA
PDN
PWRDIN
IRQ
TX_ADPCMI
RX_ADPCMO
PCM_SYNC
PCM_BCLK
RF_RESET
Q205
RESET
RSTN
Q207
CHARGE DET
CHG
IC201
RF BLOCK
SPI_EN
SPI_CLKIN
SPI_DIN
SPI_DOUT
PCONT
S_LOW
CIDIP, CIDIN
LGS
MIC
SPP, SPN
HSOUT
HMIN
LCD_*
EEPROM_DI
EEPROM_DO
RINGER
Q208~Q210
SP-AMP
SPEAKER
CN203
HEAD SET JACK
TO LCD UNIT (CALLER ID)
IC202 EEPROM
KEY PAD
KEY LEDS

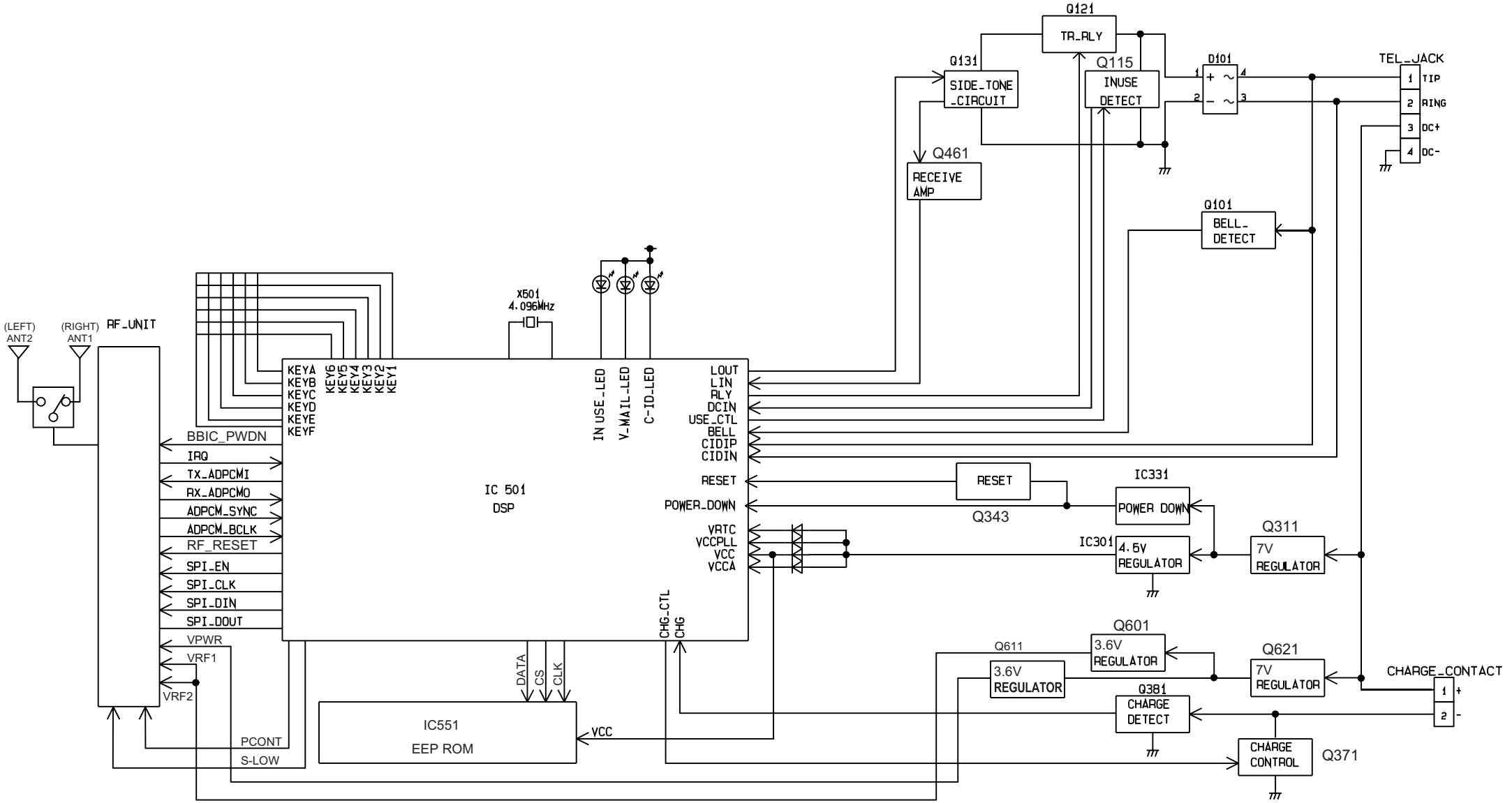
(LEFT)
ANT2
(RIGHT)
ANT1
RF_UNIT
X501
4.096MHz
KEYA
KEYB
KEYC
KEYD
KEYE
KEYF
KEY6
KEY5
KEY4
KEY3
KEY2
KEY1
IN USE_LED
V-MAIL_LED
C-ID-LED
IC 501
DSP
LOUT
LIN
RLY
DCIN
USE_CTL
BELL
CIDIP
CIDIN
RESET
POWER_DOWN
VRTC
VCCPLL
VCC
VCCA
CHG_CTL
CHG
BBIC_PWDN
IRQ
TX_ADPCMI
RX_ADPCMO
ADPCM_SYNC
ADPCM_BCLK
RF_RESET
SPI_EN
SPI_CLK
SPI_DIN
SPI_DOUT
VPWR
VRF1
VRF2
PCONT
S-LOW
DATA
CS
CLK
IC551
EEP ROM
VCC
Q121
TR_RLY
Q131
SIDE_TONE
_CIRCUIT
Q115
INUSE
DETECT
D101
TEL_JACK
1 TIP
2 RING
3 DC+
4 DC-
Q461
RECEIVE
AMP
Q101
BELL_
DETECT
RESET
Q343
IC331
POWER DOWN
IC301
4.5V
REGULATOR
Q311
7V
REGULATOR
Q601
3.6V
REGULATOR
Q611
3.6V
REGULATOR
Q621
7V
REGULATOR
CHARGE_CONTACT
Q381
CHARGE
DETECT
CHARGE
CONTROL
Q371

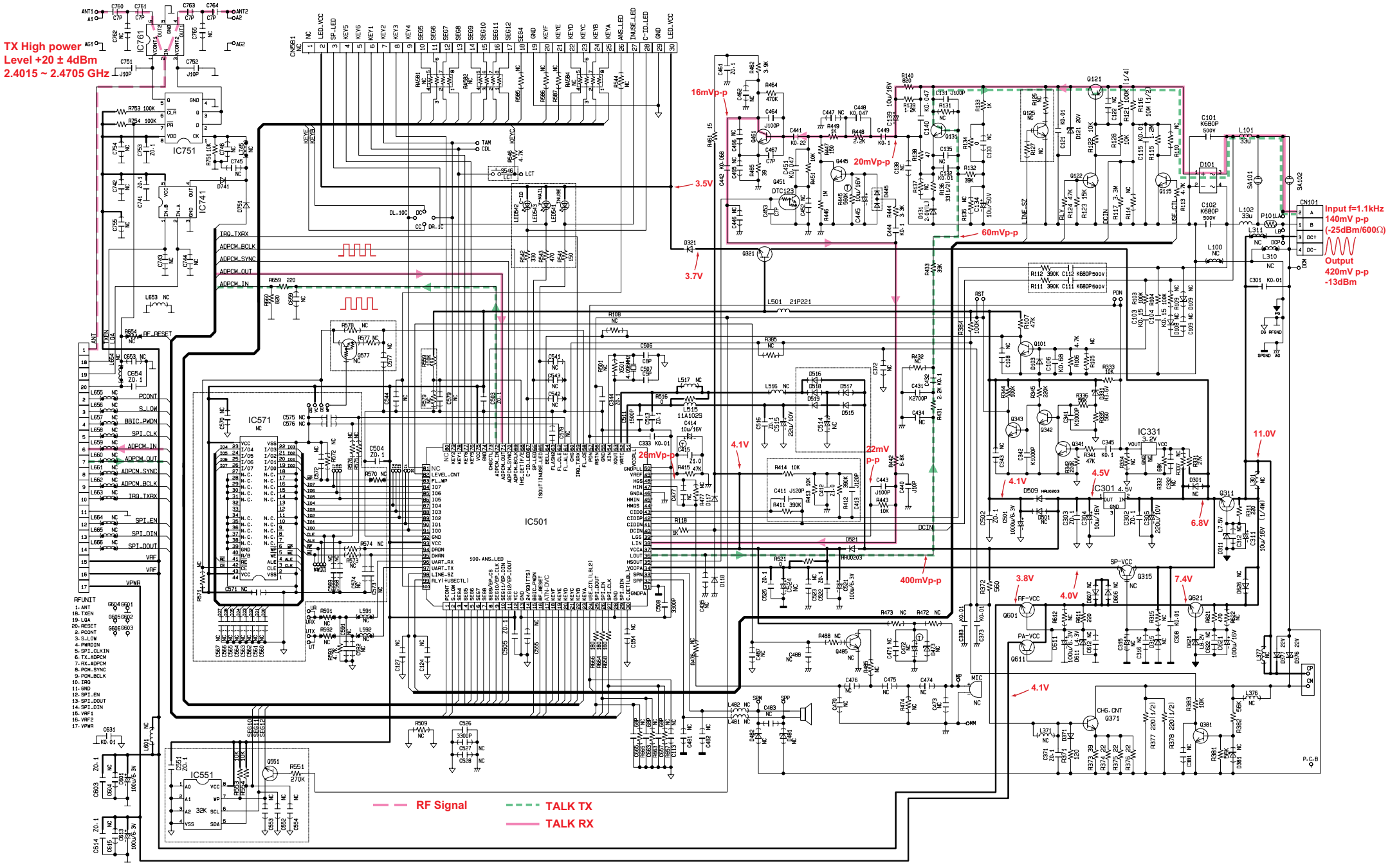
TX High power
Level +20 ± 4dBm
2.4015 ~ 2.4705 GHz
16mVp-p
20mVp-p
60mVp-p
3.5V
3.7V
4.1V
22mVp-p
22mV p-p
400mVp-p
3.8V
4.0V
4.5V
7.4V
6.8V
11.0V
Input f=1.1kHz
140mV p-p
(-25dBm/600Ω)
Output
420mV p-p
-13dBm
RF Signal
TALK TX
TALK RX

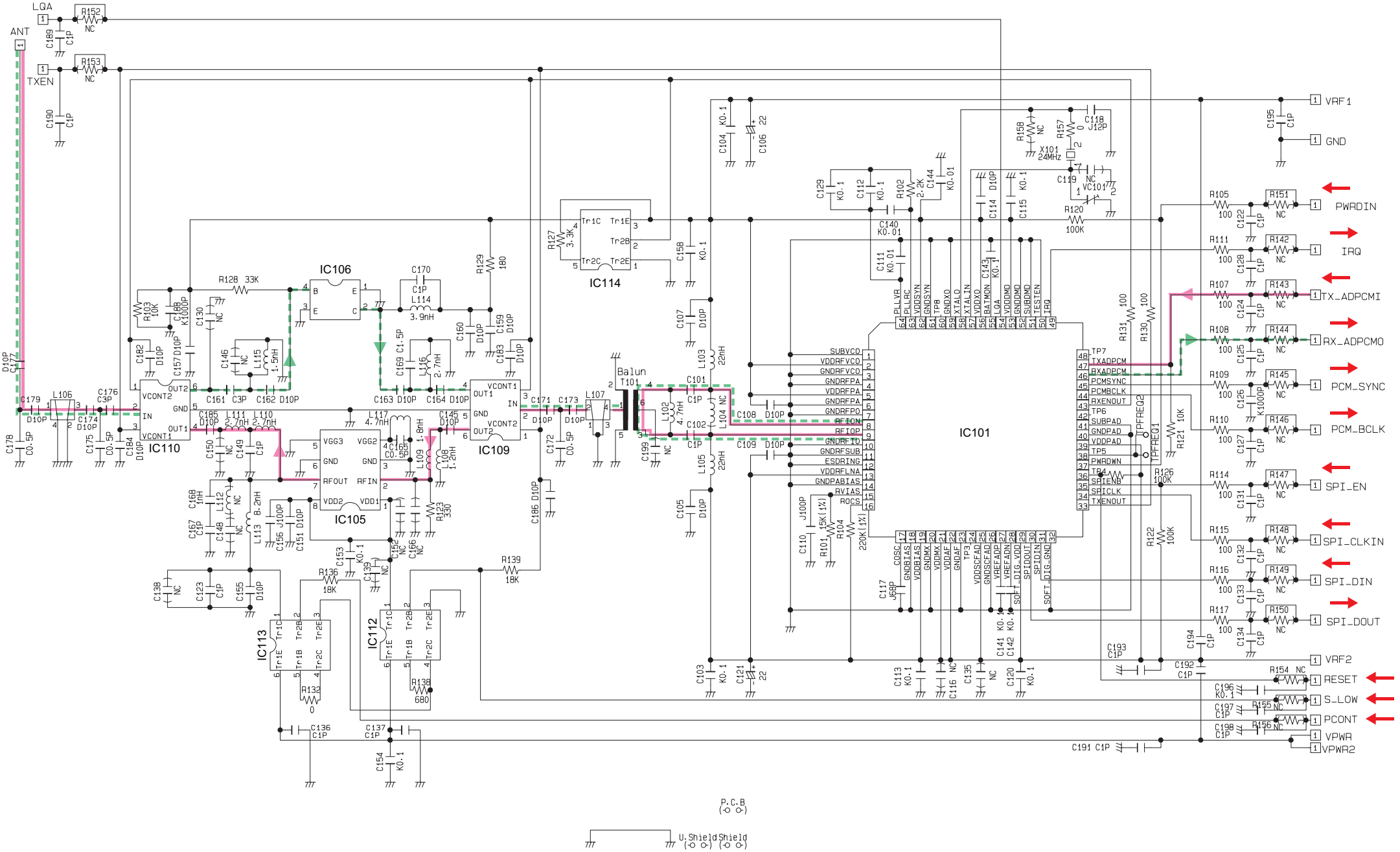
ANT
LQA
TXEN
IC101
IC105
IC106
IC109
IC110
IC112
IC113
IC114
Balun
T101
X101
24MHz
VC101
PWRDIN
IRQ
TX_ADPCMI
RX_ADPCMO
PCM_SYNC
PCM_BCLK
SPI_EN
SPI_CLKIN
SPI_DIN
SPI_DOUT
RESET
S_LOW
PCONT
VPWR
VPWR2
VRF1
VRF2
GND
P.C.B
U.Shield
Shield

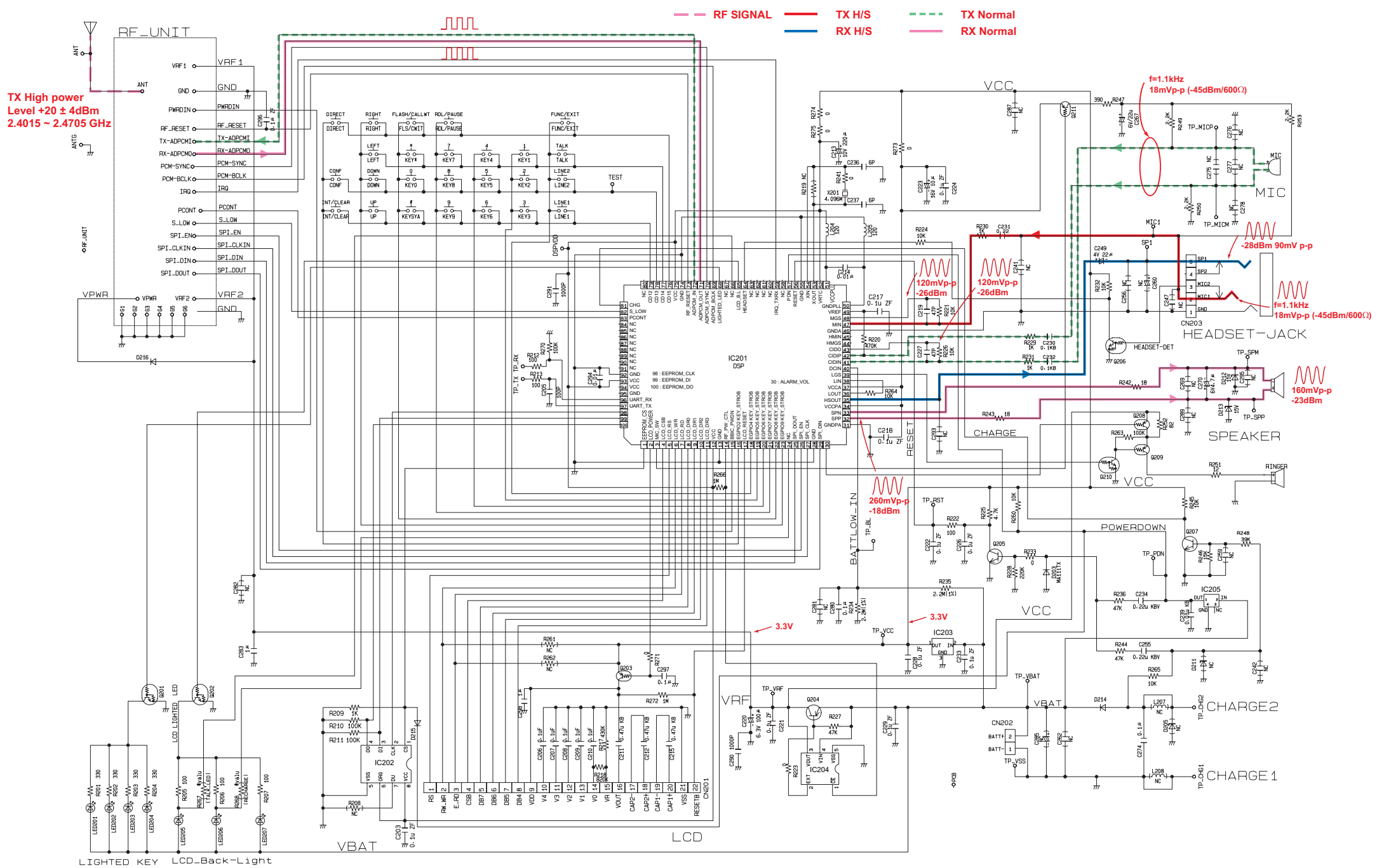

RF SIGNAL
TX H/S
RX H/S
TX Normal
RX Normal
TX High power
Level +20 ± 4dBm
2.4015 ~ 2.4705 GHz
RF_UNIT
VRF1
GND
PWRDIN
RF_RESET
TX-ADPCMI
RX-ADPCMO
PCM-SYNC
PCM-BCLK
IRQ
PCONT
S_LOW
SPI_EN
SPI_CLKIN
SPI_DIN
SPI_DOUT
VPWR
VRF2
IC201
DSP
f=1.1kHz
18mVp-p (-45dBm/600Ω)
-28dBm 90mV p-p
120mVp-p
-26dBm
160mVp-p
-23dBm
260mVp-p
-18dBm
MIC
HEADSET-JACK
SPEAKER
CHARGE
RESET
BATTLOW_IN
POWERDOWN
VCC
VRF
VBAT
LCD
CHARGE2
CHARGE1
LIGHTED KEY
LCD_Back-Light
3.3V
IC202
IC203
IC204
IC205
CN202
CN203

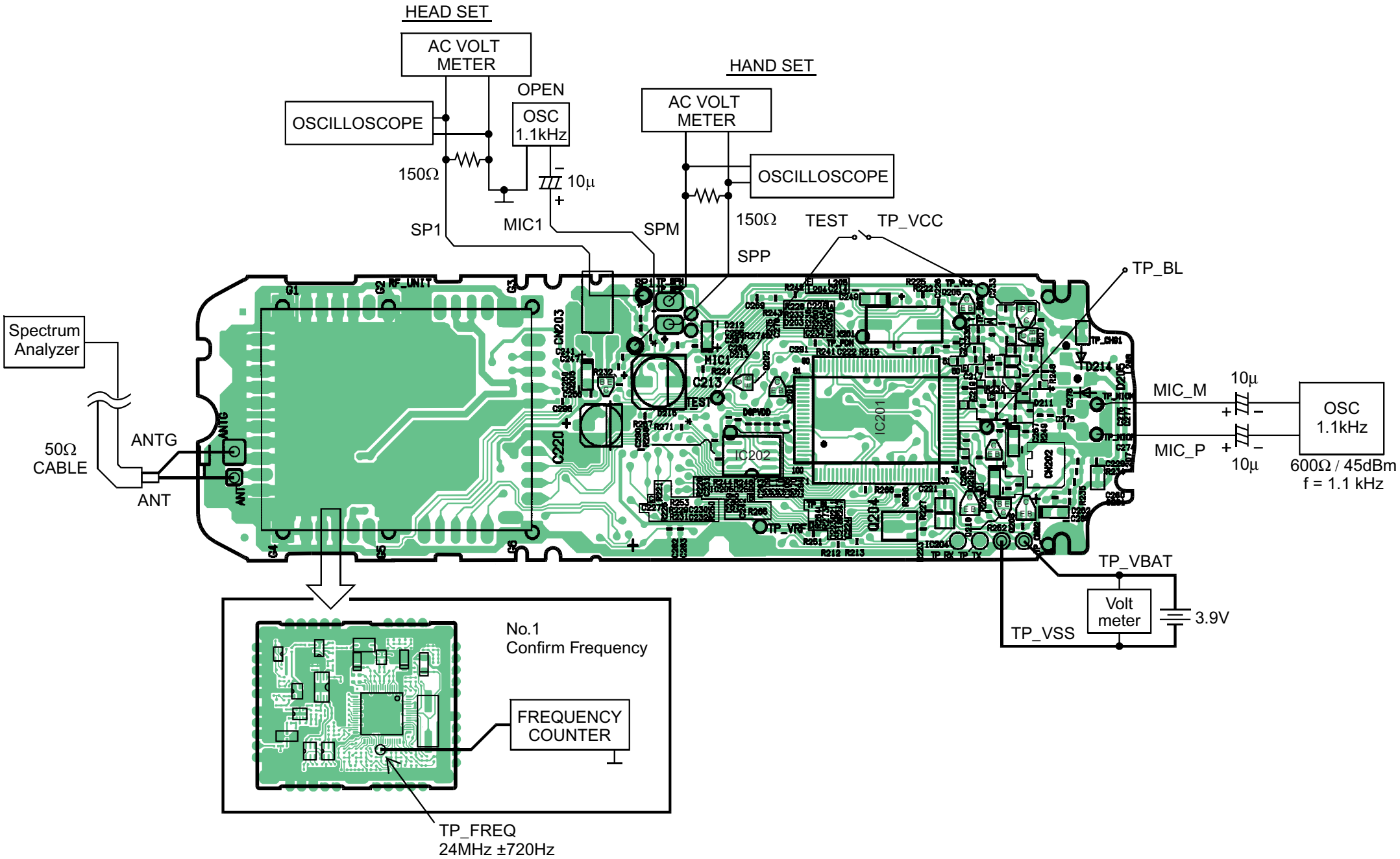
HEAD SET
AC VOLT METER
OPEN
OSCILLOSCOPE
OSC 1.1kHz
150Ω
10μ
SP1
MIC1
HAND SET
AC VOLT METER
OSCILLOSCOPE
150Ω
SPM
SPP
TEST
TP_VCC
TP_BL
Spectrum Analyzer
50Ω CABLE
ANTG
ANT
MIC_M
MIC_P
10μ
10μ
OSC 1.1kHz
600Ω / 45dBm
f = 1.1 kHz
TP_VBAT
Volt meter
3.9V
TP_VSS
No.1
Confirm Frequency
FREQUENCY COUNTER
TP_FREQ
24MHz ±720Hz

(Base Unit)

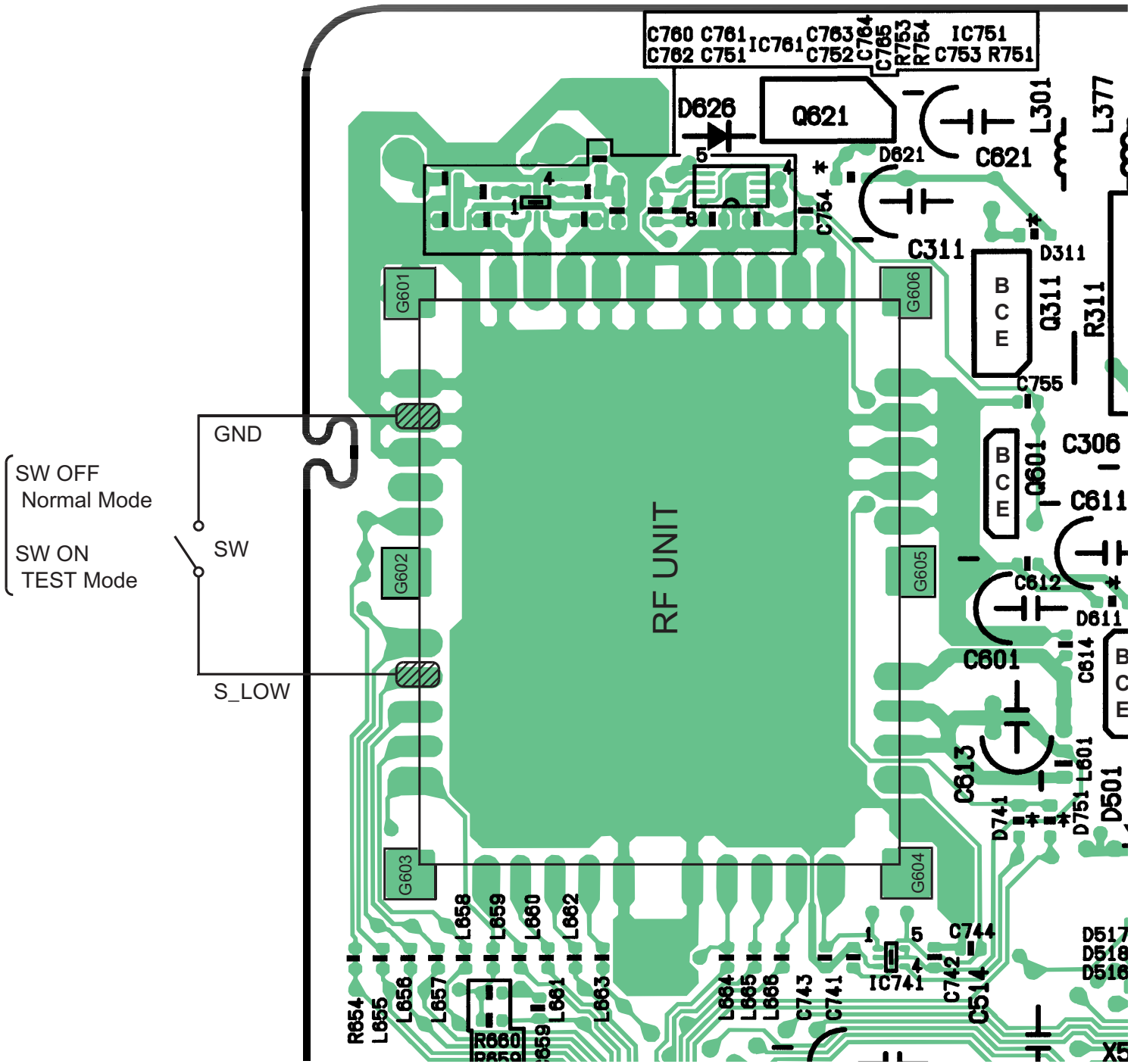

SW OFF
Normal Mode
SW ON
TEST Mode
GND
SW
S_LOW
RF UNIT
G601
G602
G603
G604
G605
G606
C760 C761
C762 C751
IC761
C763
C752
C764
C765
R753
R754
IC751
C753 R751
D626
Q621
C621
L301
L377
D621
C754
C311
D311
Q311
R311
C755
C306
Q601
C611
C612
D611
C601
C614
C613
L601
D741
D751
D501
L658
L659
L660
L662
L664
L665
L666
C743
C741
IC741
C742
C744
C514
D517
D518
D516
R654
L655
L656
L657
R660
L661
L663

(Handset)

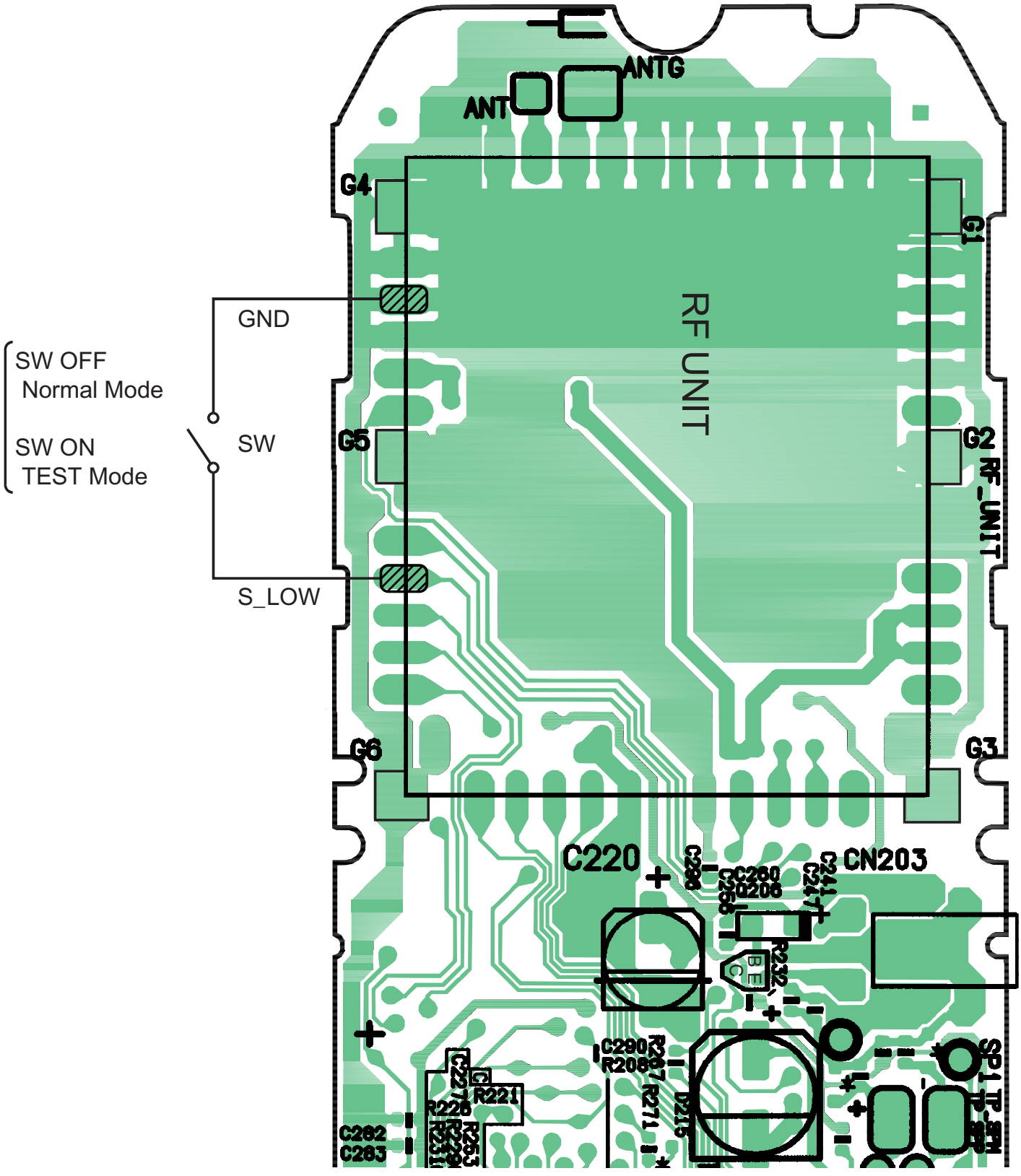
ANTG
ANT
G4
G1
RF UNIT
GND
SW OFF
Normal Mode
SW ON
TEST Mode
SW
G5
G2
RF_UNIT
S_LOW
G6
G3
C220
CN203
C282
C283
R221
R226

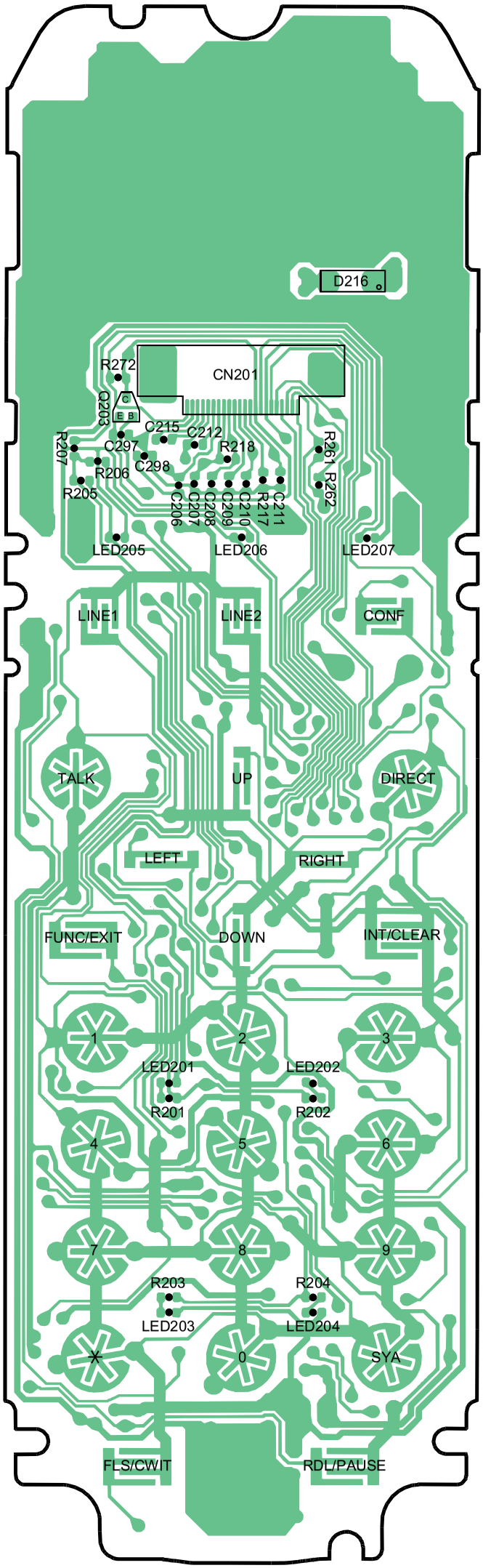
D216
R272
CN201
Q203
C
E B
C215
C212
C297
R218
R207
R261
C298
R206
R262
R205
C206
C207
C208
C209
C210
R217
C211
LED205
LED206
LED207
LINE1
LINE2
CONF
TALK
UP
DIRECT
LEFT
RIGHT
FUNC/EXIT
DOWN
INT/CLEAR
1
2
3
LED201
LED202
R201
R202
4
5
6
7
8
9
R203
R204
LED203
LED204
*
0
SYA
FLS/CWIT
RDL/PAUSE

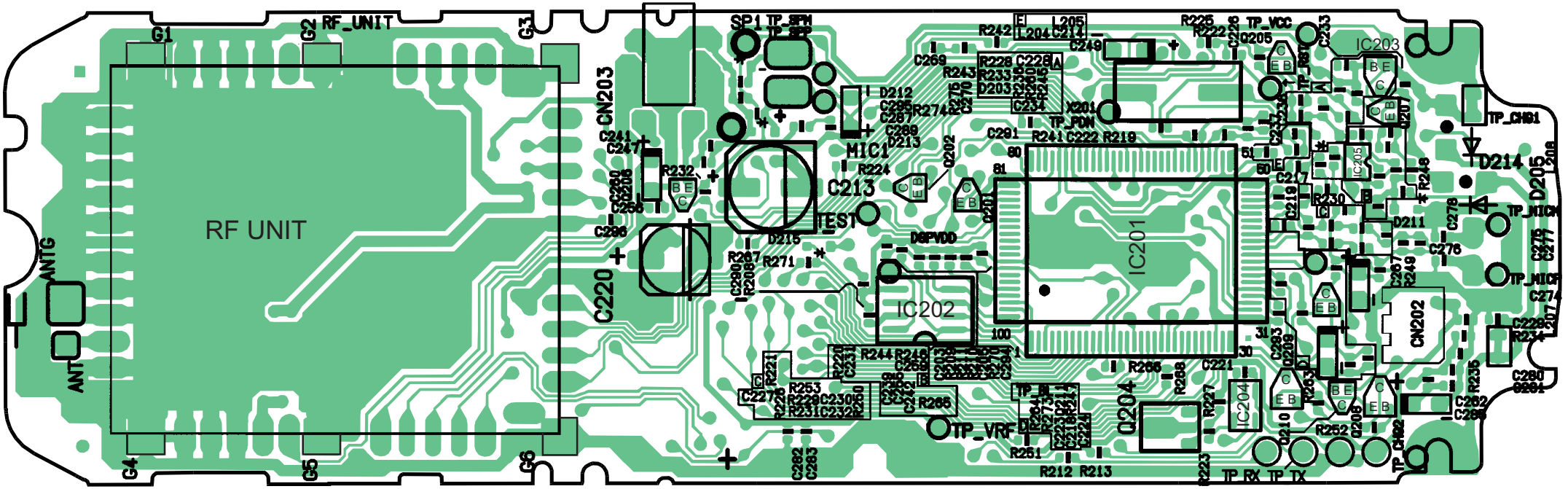
RF UNIT
G1
G2
RF_UNIT
G3
G4
G5
G6
ANT
ANTG
CN203
C220
SP1
TP_SPM
TP_SPP
MIC1
C213
TEST
D215
D212
D213
IC202
IC201
IC203
IC204
IC205
Q204
Q202
Q205
X201
TP_PDN
TP_VCC
TP_VRF
TP_CHG1
TP_CHG2
TP_MICN
TP_MICP
TP RX
TP TX
D214
D205
D211
CN202
DGPVDD

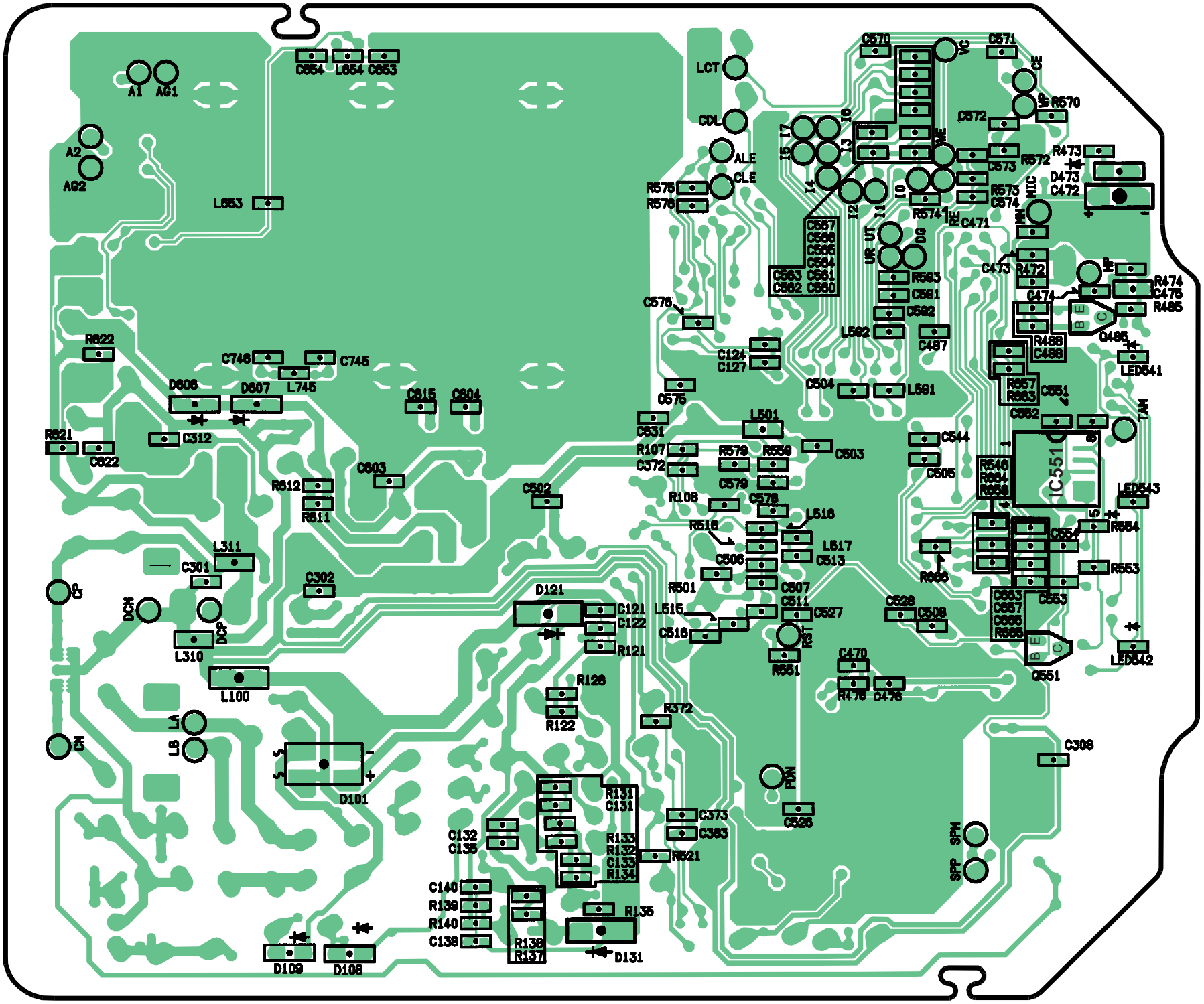

A1
AG1
A2
AG2
C654
L654
C653
L653
LCT
CDL
ALE
CLE
R575
R576
C570
VC
C571
CE
R570
C572
R572
R473
D473
C472
C573
R573
C574
R574
C471
MIC
C567
C566
C565
C564
C563
C562
C561
C560
UR
UT
DG
R593
C591
C592
C576
L592
C487
C473
R472
R474
C475
R485
C474
Q485
R488
C488
LED541
R622
C746
C745
L745
D606
D607
C615
C604
C124
C127
C575
C504
L591
R657
R663
C551
C552
TAM
R621
C622
C312
C631
L501
R107
C372
R579
R559
C503
C544
C505
R546
R664
R658
IC551
LED543
R612
R611
C603
C502
R108
C579
C578
L516
R518
L517
C513
C506
C554
R554
R553
R666
L311
C301
C302
R501
C507
C511
C527
C528
C508
C663
C657
C665
R665
C553
CP
DCM
DCP
D121
C121
C122
R121
L515
C516
RST
R551
C470
R476
C476
Q551
LED542
L310
L100
R128
R122
R372
LA
LB
CM
D101
C308
PDN
R131
C131
C373
C383
C526
C132
C135
R133
R132
C133
R134
R521
SPM
SPP
C140
R139
R140
C138
R138
R137
R135
D131
D109
D108

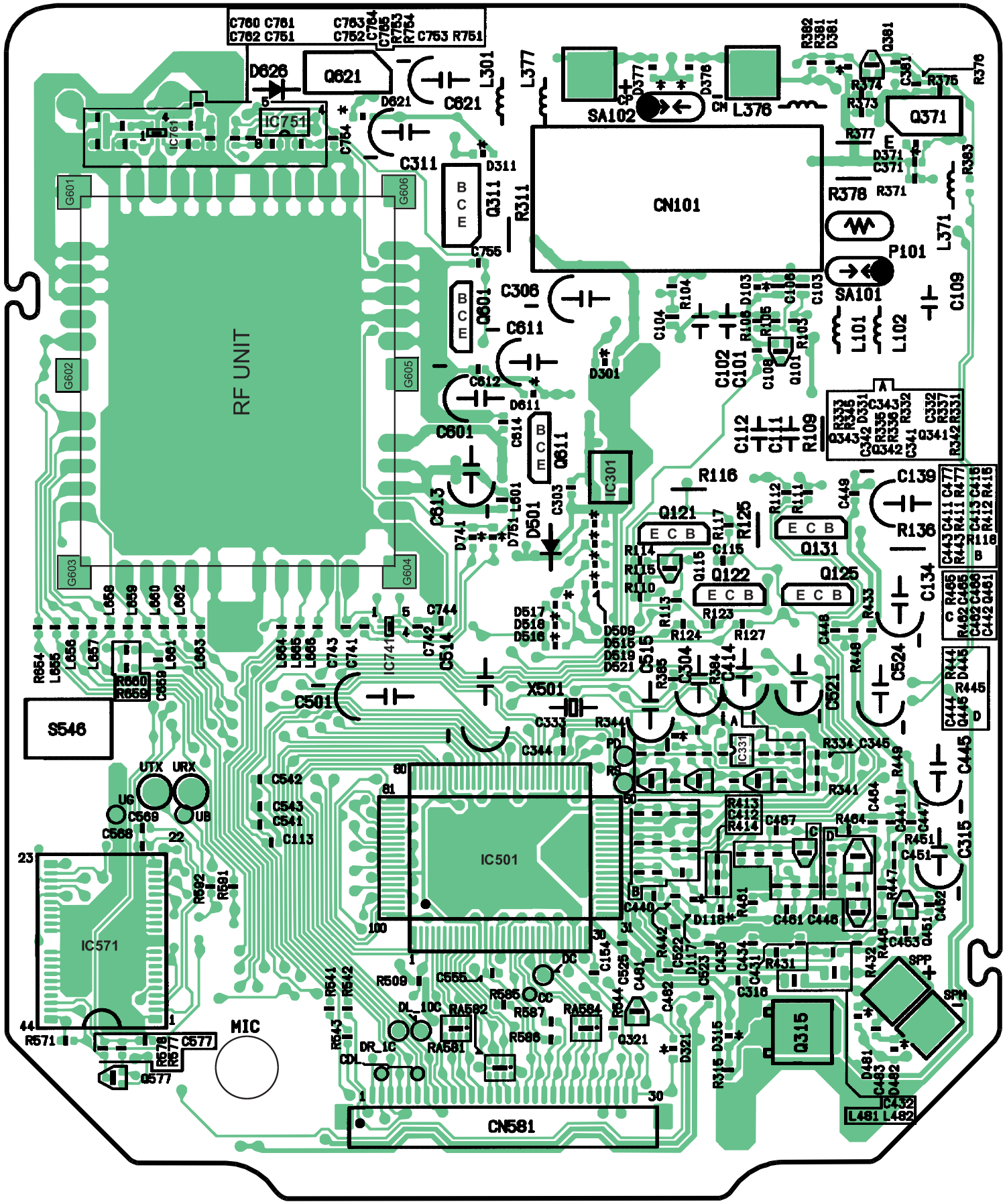
RF UNIT
CN101
IC501
IC571
IC751
IC301
IC741
IC331
Q621
Q371
Q311
Q601
Q611
Q121
Q122
Q125
Q131
Q315
Q321
Q577
SA101
SA102
P101
X501
S546
MIC
CN581
UTX
URX
UG
UB
SPP
SPM
G601
G602
G603
G604
G605
G606

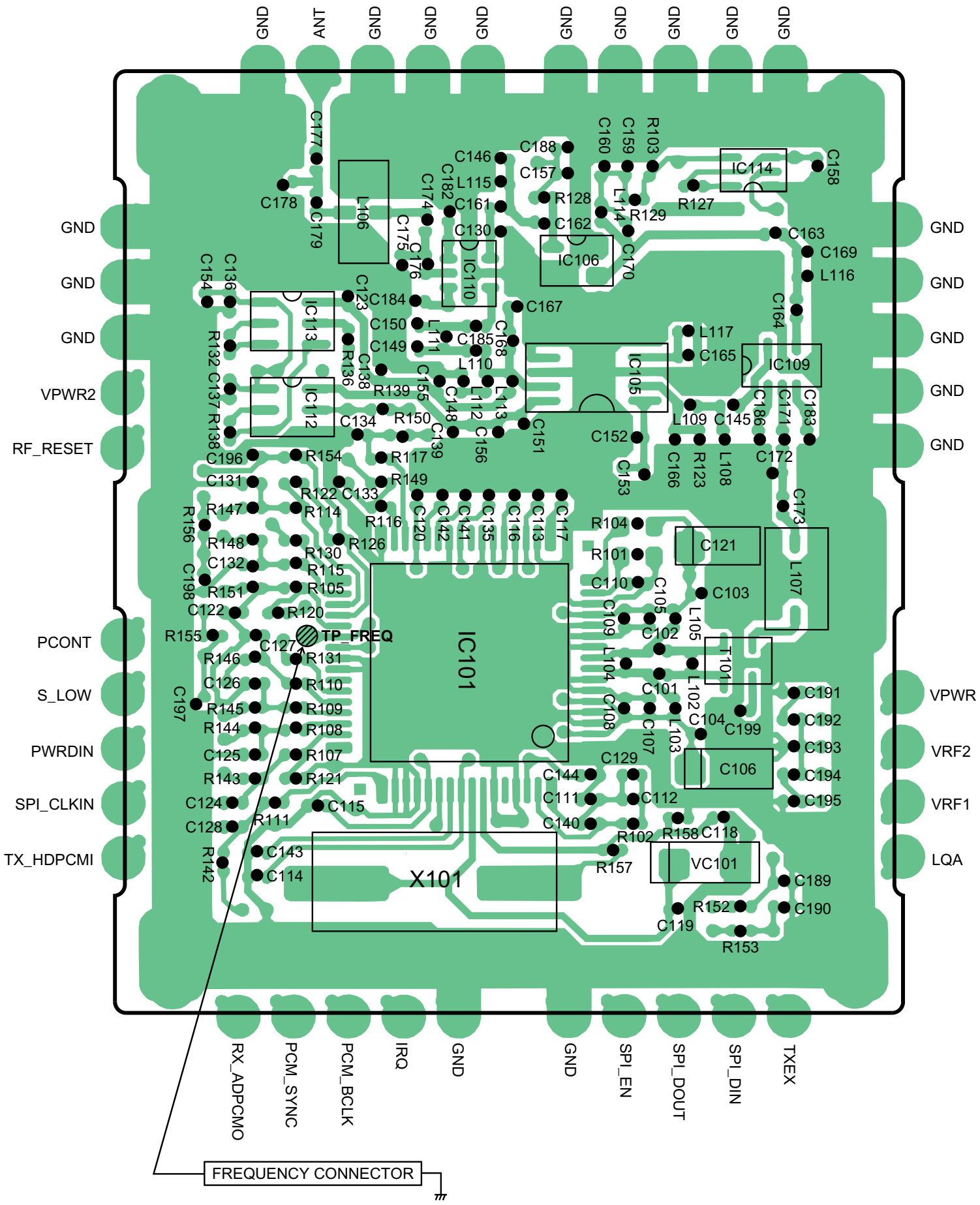
GND
ANT
GND
GND
GND
GND
GND
GND
GND
GND
GND
GND
GND
GND
GND
GND
GND
VPWR2
RF_RESET
PCONT
S_LOW
PWRDIN
SPI_CLKIN
TX_HDPCMI
VPWR
VRF2
VRF1
LQA
RX_ADPCMO
PCM_SYNC
PCM_BCLK
IRQ
GND
GND
SPI_EN
SPI_DOUT
SPI_DIN
TXEX
IC101
X101
IC106
IC109
IC110
IC112
IC113
IC114
VC101
T101
L106
L107
TP_FREQ
FREQUENCY CONNECTOR

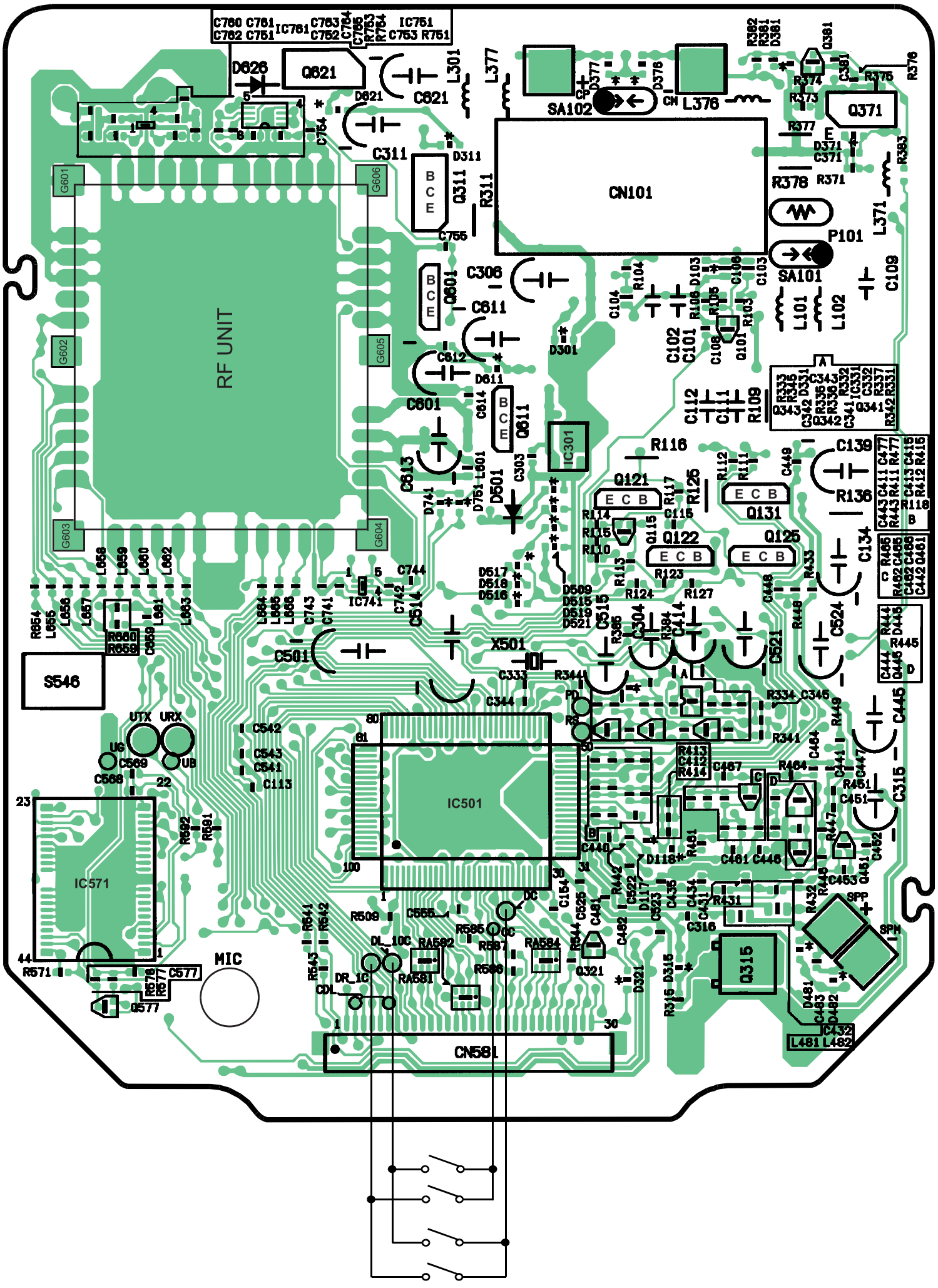
RF UNIT
CN101
SA102
SA101
P101
L376
Q371
Q621
D626
Q311
Q601
Q611
Q121
Q131
Q122
Q125
Q315
IC301
IC501
IC571
X501
S546
MIC
CN581
G601
G602
G603
G604
G605
G606

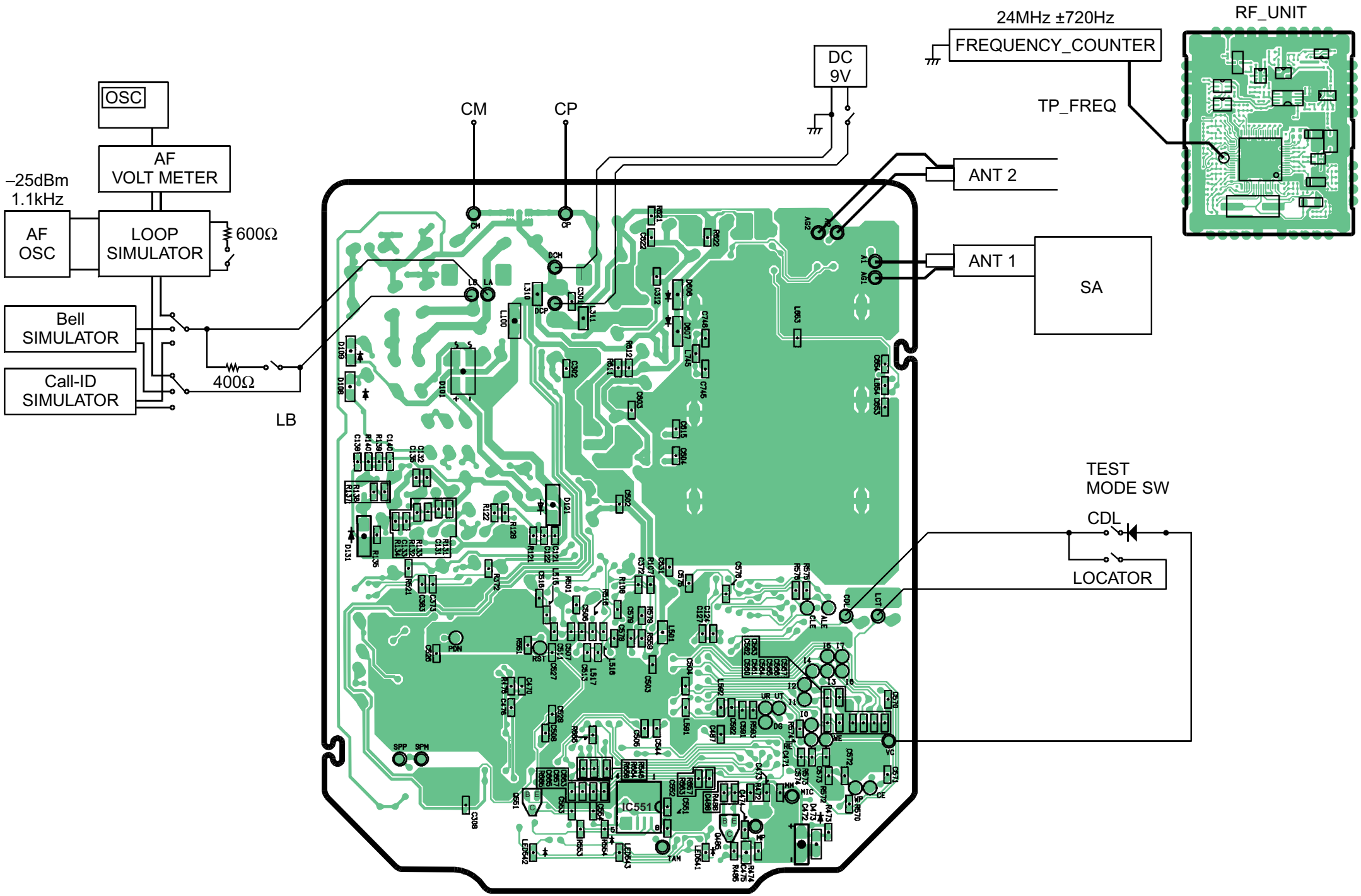
OSC
AF
VOLT METER
–25dBm
1.1kHz
AF
OSC
LOOP
SIMULATOR
600Ω
Bell
SIMULATOR
Call-ID
SIMULATOR
400Ω
LB
CM
CP
DC
9V
24MHz ±720Hz
FREQUENCY_COUNTER
TP_FREQ
RF_UNIT
ANT 2
ANT 1
SA
TEST
MODE SW
CDL
LOCATOR
IC551